EMG 30-SP-10K LIN - Setpoint adjuster

2942124

https://www.phoenixcontact.com/gb/products/2942124

Please be informed that the data shown in this PDF document is generated from our online catalog. Please find the complete data in the user documentation. Our general terms of use for downloads are valid.



Setpoint value potentiometer, to set setpoints individually, resistance value 10 kΩ

Your advantages

- Voltage reference for setpoint definition in conjunction with potentiometers

Commercial data

Item number	2942124
Packing unit	10 pc
Minimum order quantity	10 pc
Sales key	DK1129
Product key	DK1129
GTIN	4017918080617
Weight per piece (including packing)	53.65 g
Weight per piece (excluding packing)	53.65 g
Customs tariff number	85334010
Country of origin	DE

Technical data

Product properties

Product type	Setpoint potentiometer

Input data

Potentiometer

Potentiometer, resistance value	10 kΩ ±20 %
Linearity	5 % (of final value)
Potentiometer, current-carrying capacity	0.5 W

Connection data

Connection method	Screw connection
Stripping length	8 mm
Screw thread	M3
Conductor cross-section rigid	0.2 mm² ... 4 mm²
Conductor cross-section flexible	0.2 mm² ... 2.5 mm²
Conductor cross-section AWG	24 ... 12
Tightening torque	0.5 Nm ... 0.6 Nm

Dimensions

Dimensional drawing	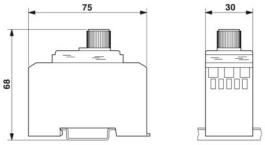
Width	30 mm
Height	75 mm
Depth	68 mm

Material specifications

Color	green (RAL 6021)
Housing material	Polycarbonate fiber reinforced PC-F

Environmental and real-life conditions

Ambient conditions

Ambient temperature (operation)	0 °C ... 40 °C

Mounting

Mounting type	DIN rail mounting
Mounting position	any

Drawings

Dimensional drawing

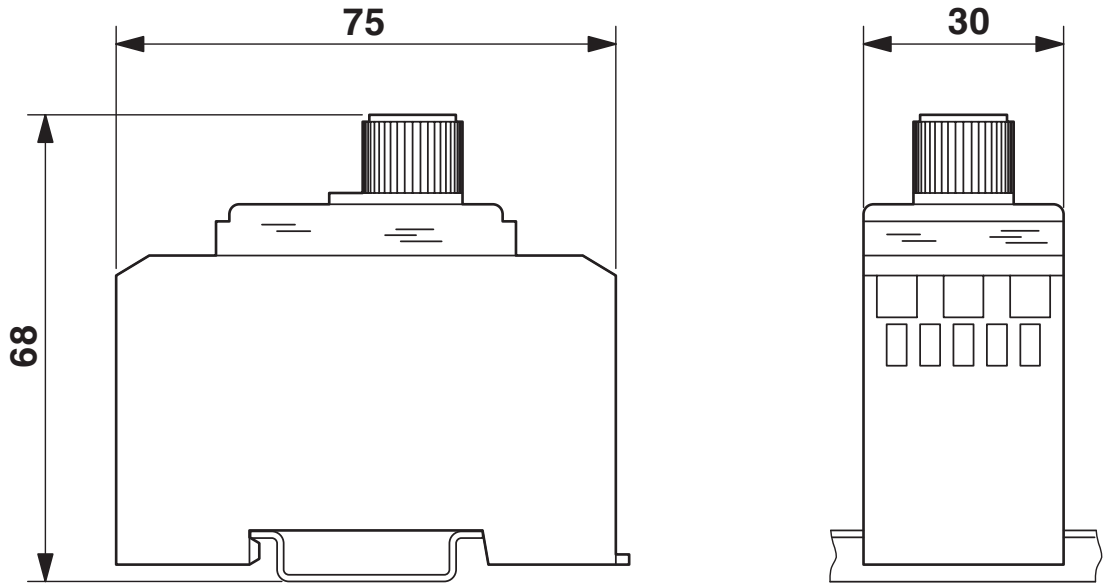

Circuit diagram

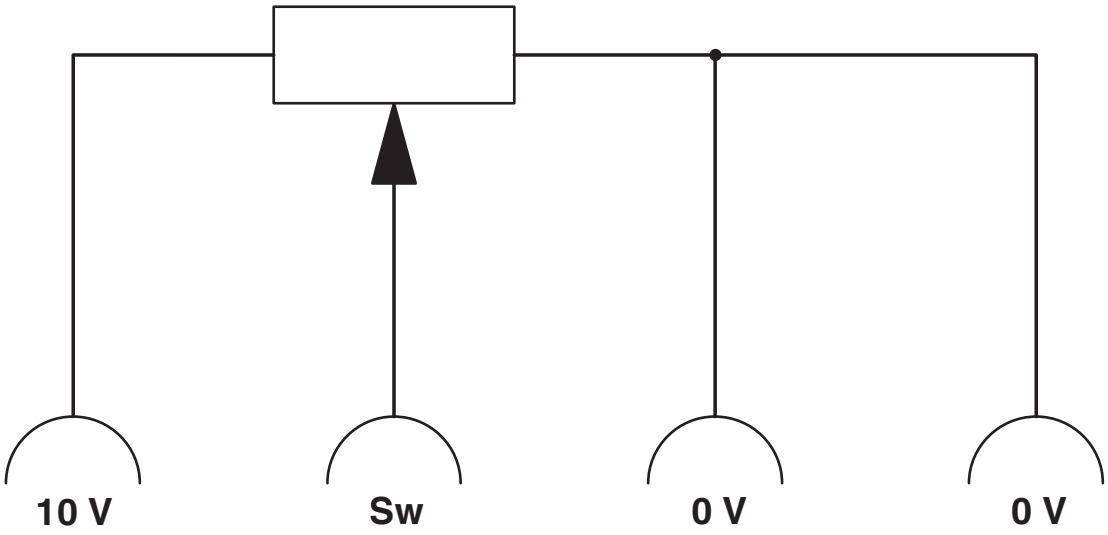

Approvals

To download certificates, visit the product detail page: https://www.phoenixcontact.com/gb/products/2942124

EAC
Approval ID: RU C-DE.A*30.B.01082

Classifications

ECLASS

ECLASS-13.0	27371227
ECLASS-15.0	27371227

ETIM

ETIM 10.0	EC001027

UNSPSC

UNSPSC 21.0	41113600

Environmental product compliance

EU RoHS

Fulfills EU RoHS substance requirements	Yes
Exemption	34, 6(c), 7(c)-I

China RoHS

Environment friendly use period (EFUP)	EFUP-50
	An article-related China RoHS declaration table can be found in the download area for the respective article under "Manufacturer declaration". For all articles with EFUP-E, no China RoHS declaration table issued and required.

EU REACH SVHC

REACH candidate substance (CAS No.)	Lead(CAS: 7439-92-1)
SCIP	08f70c33-3d86-413d-ba1f-a43c10cbc146

EF3.1 Climate Change

CO2e kg	0.32 kg CO2e

Phoenix Contact 2026 © - all rights reserved
https://www.phoenixcontact.com

PHOENIX CONTACT Ltd
Halesfield 13, Telford
Shropshire, TF7 4PG
01952 681700
info@phoenixcontact.co.uk