QUINT-PS-3X400-500AC/24DC/20 - Power supply

2938727

https://www.phoenixcontact.com/gb/products/2938727

Please be informed that the data shown in this PDF document is generated from our online catalog. Please find the complete data in the user documentation. Our general terms of use for downloads are valid.



DIN rail power supply unit 24 V DC/20 A, primary-switched, 3-phase
Please use the following item in new systems: 2904622

Product description

QUINT POWER power supply units for plant and special engineering reliably start heavy loads with high inrush currents using the POWER BOOST. Thanks to the wide-range input and extensive package of approvals, they can be used in all sectors of industry the world over. The switching output or floating relay contact are used for remote diagnostics.

Commercial data

Item number	2938727
Packing unit	1 pc
Minimum order quantity	1 pc
Sales key	CMPP33
Product key	CMPP33
GTIN	4017918899547
Weight per piece (including packing)	2,306.5 g
Weight per piece (excluding packing)	1,930 g
Customs tariff number	85044095
Country of origin	DE

Technical data

Input data

AC operation

Nominal input voltage range	3x 400 V AC ... 500 V AC
Input voltage range	3x 320 V AC ... 575 V AC (for all three phases)
	450 V DC ... 800 V DC
Input voltage range AC	3x 320 V AC ... 575 V AC (for all three phases)
Input voltage range DC	450 V DC ... 800 V DC
Voltage type of supply voltage	AC/DC
Inrush current	< 15 A (typical)
Inrush current integral (I^2t)	1 A^2s
AC frequency range	45 Hz ... 65 Hz
Frequency range DC	0 Hz
Mains buffering time	> 23 ms (400 V AC)
	> 25 ms (480 V AC)
Current consumption	approx. 3x 1.1 A (400 V AC)
	3x 1 A (480 V AC)
Nominal power consumption	526 W
Protective circuit	Transient surge protection; Varistor
Typical response time	< 1 s
Recommended breaker for input protection	3x 6 A ... 16 A (Characteristics B, C, D, K)
Discharge current to PE	< 3.5 mA

Output data

Efficiency	> 91 % (at 400 V AC and nominal values)
Nominal output voltage	24 V DC ±1 %
Setting range of the output voltage (U_{Set})	22.5 V ... 28.5 V
Nominal output current (I_N)	20 A (up to 60 °C)
POWER BOOST (I_{Boost})	27 A
Derating	60 °C (2.5 %/K)
Active current limitation	Approx. I_{BOOST} = 27 A (for short-circuit)
Control deviation	< 1 % (change in load, static 10 % ... 90 %)
	< 2 % (change in load, dynamic 10 % ... 90 %)
	< 0.1 % (change in input voltage ±10 %)
Residual ripple	< 10 mV_{PP} (with nominal values)
Output power	480 W
Peak switching voltages nominal load	< 60 mV_{PP} (20 MHz)
Maximum no-load power dissipation	< 7 W
Power loss nominal load max.	< 47 W
Rise time	< 2 ms (U_{OUT} (10 % ... 90 %))
Connection in parallel	yes, for redundancy and increased capacity
Connection in series	yes

Signal: DC OK active

Output description	U_{OUT} > 0.9 x U_N: High signal
Maximum switching voltage	≤ 24 V
Output voltage	+ 24 V DC (Signal)
Maximum inrush current	≤ 40 mA
Continuous load current	≤ 40 mA

Signal: DC OK floating

Output description	Relay contact, U_{OUT} > 0.9 x U_N: Contact closed
Maximum switching voltage	≤ 30 V AC/DC
Maximum inrush current	≤ 1 A
Continuous load current	≤ 1 A

Connection data

Input

Connection method	Screw connection
Conductor cross-section, rigid min.	0.2 mm²
Conductor cross-section, rigid max.	6 mm²
Conductor cross-section flexible min.	0.2 mm²
Conductor cross-section flexible max.	4 mm²
Conductor cross-section AWG min.	24
Conductor cross-section AWG max.	10
Stripping length	8 mm
Screw thread	M3
Tightening torque, min	0.5 Nm
Tightening torque max	0.6 Nm

Output

Connection method	Screw connection
Conductor cross-section, rigid min.	0.5 mm²
Conductor cross-section, rigid max.	16 mm²
Conductor cross-section flexible min.	0.5 mm²
Conductor cross-section flexible max.	10 mm²
Conductor cross-section AWG min.	20
Conductor cross-section AWG max.	6
Stripping length	10 mm
Screw thread	M4
Tightening torque, min	1.2 Nm
Tightening torque max	1.5 Nm

Signal

Conductor cross-section, rigid min.	0.5 mm²
Conductor cross-section, rigid max.	16 mm²
Conductor cross-section flexible min.	0.5 mm²

Conductor cross-section flexible max.	10 mm²
Conductor cross-section AWG min.	20
Conductor cross-section AWG max.	6
Screw thread	M4
Tightening torque, min	1.2 Nm
Tightening torque max	1.5 Nm

Signaling

Types of signaling	LED
	Active switching output
	Relay contact
Operating voltage display	Green LED

Signal output: DC OK active

Status display	"DC OK" LED green
Note on status display	U_{OUT} < 0.9 x U_N: LED flashing

Signal output: DC OK floating

Status display	"DC OK" LED green

Electrical properties

Number of phases	3
Insulation voltage input/output	4 kV AC (type test)
	2 kV AC (routine test)
Insulation voltage output / PE	500 V DC (routine test)
Insulation voltage input / PE	3.5 kV AC (type test)
	2 kV AC (routine test)

Product properties

Product type	Power supply
Product family	QUINT POWER
MTBF (IEC 61709, SN 29500)	> 500000 h

Insulation characteristics

Protection class	I (with PE connection)
Overvoltage category (EN 62477-1)	III
Degree of pollution	2

Dimensions

Width	160 mm
Height	130 mm
Depth	125 mm

Installation dimensions

Installation distance right/left	0 mm / 0 mm
Installation distance top/bottom	50 mm / 50 mm

Alternative assembly

Width	122 mm
Height	130 mm
Depth	163 mm

Mounting

Assembly note	alignable: horizontally 0 mm, vertically 50 mm
Mounting position	horizontal DIN rail NS 35, EN 60715

Material specifications

Housing material	Metal
Type of housing	AluNox (AlMg1)

Environmental and real-life conditions

Ambient conditions

Degree of protection	IP20
Ambient temperature (operation)	-25 °C ... 70 °C (> 60 °C Derating: 2,5 %/K)
Ambient temperature (storage/transport)	-40 °C ... 85 °C
Climatic class	3K3 (in acc. with EN 60721)
Max. permissible relative humidity (operation)	95 % (at 25 °C, non-condensing)
Shock	18 ms, 30g, in each space direction (according to IEC 60068-2-27)
Vibration (operation)	< 15 Hz, amplitude ±2.5 mm (according to IEC 60068-2-6)
	15 Hz ... 150 Hz, 2.3g, 90 min.

Standards and regulations

Standard – Limitation of mains harmonic currents	EN 61000-3-2
Standard - Electrical safety	EN 62368-1
Standard - Equipment safety	GS (tested safety)
Standard – Protection against shock currents, basic requirements for protective separation in electrical equipment	EN 62368-1
Standard – Safety extra-low voltage	EN 62368-1 (SELV)
	EN 60204 (PELV)
Standard - Safe isolation	DIN VDE 0100-410

Approvals

Shipbuilding approval	DNV GL (EMC A)
UL approvals	UL/C-UL listed UL 508
	UL/C-UL Recognized UL 60950-1
	UL/C-UL Listed UL 1604 Class I, Division 2, Groups A, B, C, D

EMC data

Electromagnetic compatibility	Conformance with EMC Directive 2014/30/EU
Low Voltage Directive	Conformance with Low Voltage Directive 2014/35/EC

EMC requirements for noise emission	EN 61000-6-3
	EN 61000-6-4
EMC requirements for noise immunity	EN 61000-6-1
	EN 61000-6-2

Noise emission

Standards/regulations	EN 55011 (EN 55022)

Electrostatic discharge

Standards/regulations	EN 61000-4-2
Housing	Level 4

Electrostatic discharge

Contact discharge	8 kV
Discharge in air	15 kV
Comments	Criterion B

Electromagnetic HF field

Standards/regulations	EN 61000-4-3

Electromagnetic HF field

Frequency range	80 MHz ... 2 GHz
Test field strength	10 V/m
Comments	Criterion A

Fast transients (burst)

Standards/regulations	EN 61000-4-4

Fast transients (burst)

Input	4 kV (level 4 - asymmetrical)
Output	2 kV (Level 3 - asymmetrical)
Signal	1 kV (Level 2 - asymmetrical)
Comments	Criterion B

Surge voltage load (surge)

Standards/regulations	EN 61000-4-5

Surge voltage load (surge)

Input	4 kV (inst. class 4 - asymmetrical: conductor to ground)
	2 kV (inst. class 4 -symmetrical: conductor to conductor)
Output	0.5 kV (level 1 - asymmetrical: conductor to ground)
	0.5 kV (level 1 - symmetrical: conductor to conductor)
Signal	1 kV (level 2 - asymmetrical: conductor to ground)
Comments	Criterion B

Conducted interference

Standards/regulations	EN 61000-4-6

Conducted interference

Input/output/signal	Level 3 - asymmetrical
Frequency range	0.15 MHz ... 80 MHz
Comments	Criterion A
Voltage	10 V

Voltage dips

Standards/regulations	EN 61000-4-11

Emitted interference

Standards/regulations	EN 61000-6-3
Radio interference voltage in acc. with EN 55011	EN 55011 (EN 55022) Class B, area of application: Industry and residential
Emitted radio interference in acc. with EN 55011	EN 55011 (EN 55022) Class B, area of application: Industry and residential

Drawings

Block diagram

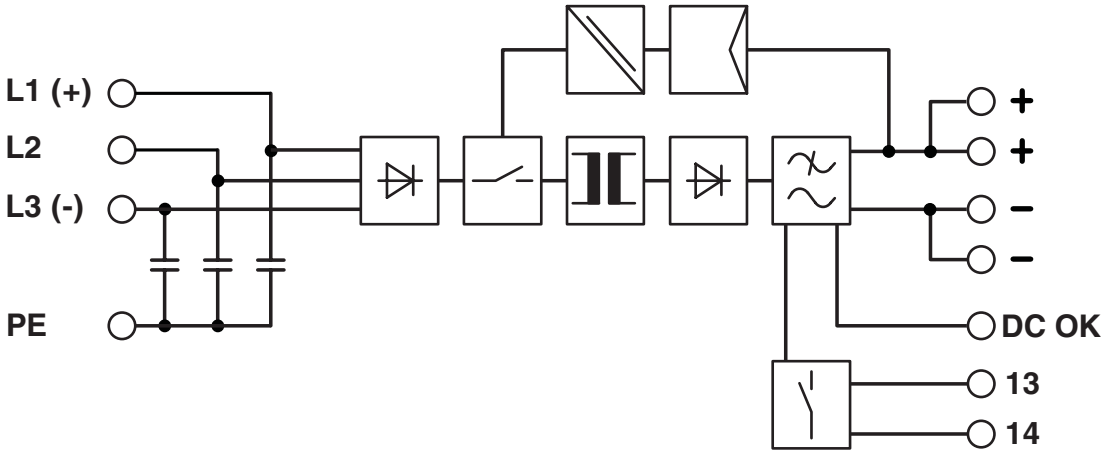

Classifications

UNSPSC

UNSPSC 21.0	39121000

Environmental product compliance

EU RoHS

Fulfills EU RoHS substance requirements	Yes
Exemption	7(a), 7(c)-I

China RoHS

Environment friendly use period (EFUP)	EFUP-50
	An article-related China RoHS declaration table can be found in the download area for the respective article under "Manufacturer declaration". For all articles with EFUP-E, no China RoHS declaration table issued and required.

EU REACH SVHC

REACH candidate substance (CAS No.)	Lead(CAS: 7439-92-1)

Phoenix Contact 2026 © - all rights reserved
https://www.phoenixcontact.com

PHOENIX CONTACT Ltd
Halesfield 13, Telford
Shropshire, TF7 4PG
01952 681700
info@phoenixcontact.co.uk