QUINT-PS-3X400-500AC/24DC/ 5 - Power supply

2938594

https://www.phoenixcontact.com/gb/products/2938594

Please be informed that the data shown in this PDF document is generated from our online catalog. Please find the complete data in the user documentation. Our general terms of use for downloads are valid.



DIN rail power supply unit 24 V DC/5 A, primary switched-mode, 3-phase.

Product description

QUINT POWER is the powerful 60 - 960 W DC power supply unit for universal use. With its wide-range input, single and three-phase versions, and international approval package, this solution is unrivalled. QUINT POWER provides reliable power supply: generously dimensioned capacitors ensure mains buffering of over 20 ms at full load. Full output power is provided by all three-phase devices, even in the event of a permanent phase failure. The Power Boost power reserve easily starts loads with high inrush currents and ensures that fuses are reliably tripped. Preventive function monitoring diagnoses impermissible operating states and minimizes downtimes in your system. Remote monitoring is provided by an active transistor switching output and a floating relay contact. All devices are idling-proof and short-circuit-proof, and are available with a regulated and adjustable output voltage of 12, 24, and 48 V DC with output currents of 2.5, 5, 10, 20, 30, and 40 A. Power supply units for use in Ex zone 2, uninterruptible solutions, AS-i power supply units, and a QUINT diode complete this comprehensive product range.

Commercial data

Item number	2938594
Packing unit	1 pc
Minimum order quantity	1 pc
Sales key	CMPP33
Product key	CMPP33
GTIN	4017918908362
Weight per piece (including packing)	1,288 g
Weight per piece (excluding packing)	950 g
Customs tariff number	85044095
Country of origin	Information on the country of origin is provided with the delivery.

Technical data

Input data

AC operation

Nominal input voltage range	3x 400 V AC ... 500 V AC
Input voltage range	3x 320 V AC ... 575 V AC (for all three phases)
	450 V DC ... 800 V DC
Input voltage range AC	3x 320 V AC ... 575 V AC (for all three phases)
Input voltage range DC	450 V DC ... 800 V DC
Voltage type of supply voltage	AC/DC
Inrush current	< 15 A (typical)
Inrush current integral (I^2t)	3 A^2s
AC frequency range	45 Hz ... 65 Hz
Frequency range DC	0 Hz
Mains buffering time	> 50 ms (400 V AC)
	> 50 ms (480 V AC)
Current consumption	approx. 3x 0.36 A (400 V AC)
	3x 0.34 A (480 V AC)
Nominal power consumption	147 W
Protective circuit	Transient surge protection; Varistor
Typical response time	< 1 s
Input fuse	5 A (slow-blow, internal)
Permissible backup fuse	B6 B10 B16
Permissible DC backup fuse	DC: Connect a suitable fuse upstream
Recommended breaker for input protection	3x 6 A ... 16 A (Characteristics B, C, D, K)
Discharge current to PE	< 3.5 mA

Output data

Efficiency	> 88 %
Nominal output voltage	24 V DC ±1 %
Setting range of the output voltage (U_{Set})	22.5 V ... 28.5 V
Nominal output current (I_N)	5 A (up to 60 °C)
POWER BOOST (I_{Boost})	7.5 A
Derating	60 °C ... 70 °C (2.5 %/K)
Feedback voltage resistance	35 V DC
Active current limitation	Approx. I_{BOOST} = 7.5 A (for short-circuit)
Control deviation	< 1 % (change in load, static 10 % ... 90 %)
	< 2 % (change in load, dynamic 10 % ... 90 %)
	< 0.1 % (change in input voltage ±10 %)
Residual ripple	< 10 mV_{PP} (with nominal values)
Output power	120 W
Peak switching voltages nominal load	< 140 mV_{PP} (20 MHz)
Maximum no-load power dissipation	< 3 W

Power loss nominal load max.	< 17 W
Rise time	< 2 ms (U_{OUT} (10 % ... 90 %))
Connection in parallel	yes, for redundancy and increased capacity
Connection in series	yes

Signal: DC OK active

Output description	U_{OUT} > 0.9 x U_N: High signal
Maximum switching voltage	≤ 24 V
Output voltage	+ 24 V DC (Signal)
Maximum inrush current	≤ 40 mA
Continuous load current	≤ 40 mA

Signal: DC OK floating

Output description	Relay contact, U_{OUT} > 0.9 x U_N: Contact closed
Maximum switching voltage	≤ 30 V AC/DC
Maximum inrush current	≤ 1 A
Continuous load current	≤ 1 A

Connection data

Input

Connection method	Screw connection
Conductor cross-section, rigid min.	0.2 mm²
Conductor cross-section, rigid max.	2.5 mm²
Conductor cross-section flexible min.	0.2 mm²
Conductor cross-section flexible max.	2.5 mm²
Conductor cross-section AWG min.	24
Conductor cross-section AWG max.	12
Stripping length	8 mm
Screw thread	M3
Tightening torque, min	0.5 Nm
Tightening torque max	0.6 Nm

Output

Connection method	Screw connection
Conductor cross-section, rigid min.	0.2 mm²
Conductor cross-section, rigid max.	2.5 mm²
Conductor cross-section flexible min.	0.2 mm²
Conductor cross-section flexible max.	2.5 mm²
Conductor cross-section AWG min.	24
Conductor cross-section AWG max.	12
Stripping length	8 mm
Screw thread	M3
Tightening torque, min	0.5 Nm
Tightening torque max	0.6 Nm

Signal

Conductor cross-section, rigid min.	0.2 mm²
Conductor cross-section, rigid max.	2.5 mm²
Conductor cross-section flexible min.	0.2 mm²
Conductor cross-section flexible max.	2.5 mm²
Conductor cross-section AWG min.	24
Conductor cross-section AWG max.	12
Screw thread	M3
Tightening torque, min	0.5 Nm
Tightening torque max	0.6 Nm

Signaling

Types of signaling	LED
	Active switching output
	Relay contact
Operating voltage display	Green LED

Signal output: DC OK active

Status display	"DC OK" LED green
Note on status display	U_{OUT} < 0.9 x U_N: LED flashing

Signal output: DC OK floating

Status display	"DC OK" LED green

Electrical properties

Number of phases	3
Insulation voltage input/output	4 kV AC (type test)
	2 kV AC (routine test)
Insulation voltage output / PE	500 V DC (routine test)
Insulation voltage input / PE	3.5 kV AC (type test)
	2 kV AC (routine test)

Product properties

Product type	Power supply
Product family	QUINT POWER
MTBF (IEC 61709, SN 29500)	> 500000 h

Insulation characteristics

Protection class	I (with PE connection)
Overvoltage category (EN 62477-1)	III
Degree of pollution	2

Dimensions

Width	70 mm
Height	130 mm

Depth	125 mm

Alternative assembly

Width	122 mm
Height	73 mm
Depth	130 mm

Mounting

Assembly note	alignable: horizontally 0 mm, vertically 50 mm
Mounting position	horizontal DIN rail NS 35, EN 60715

Material specifications

Housing material	Metal
Type of housing	AluNox (AlMg1)

Environmental and real-life conditions

Ambient conditions

Degree of protection	IP20
Ambient temperature (operation)	-25 °C ... 70 °C (> 60 °C Derating: 2,5 %/K)
Ambient temperature (storage/transport)	-40 °C ... 85 °C
Max. permissible relative humidity (operation)	95 % (at 25 °C, non-condensing)
Shock	18 ms, 30g, in each space direction (according to IEC 60068-2-27)
Vibration (operation)	< 15 Hz, amplitude ±2.5 mm (according to IEC 60068-2-6)
	15 Hz ... 150 Hz, 2.3g, 90 min.

Standards and regulations

Standard – Electronic equipment for use in electrical power installations and their assembly into electrical power installations	EN 50178/VDE 0160 (PELV)
Standard – Limitation of mains harmonic currents	EN 61000-3-2
Standard - Electrical safety	EN 60950-1/VDE 0805 (SELV)
	EN 61558-2-17
Standard - Equipment safety	GS (tested safety)
Standard – Protection against shock currents, basic requirements for protective separation in electrical equipment	EN 50178
Standard – Safety extra-low voltage	EN 60950-1 (SELV)
	EN 60204 (PELV)
Standard - Safe isolation	DIN VDE 0100-410
Standard - Safety of transformers	EN 61558-2-17

Approvals

Shipbuilding approval	DNV GL (EMC A), ABS
UL approvals	UL/C-UL listed UL 508
	UL/C-UL Recognized UL 60950-1
	UL ANSI/ISA-12.12.01 Class I, Division 2, Groups A, B, C, D (Hazardous Location)

EMC data

Electromagnetic compatibility	Conformance with EMC Directive 2014/30/EU
Low Voltage Directive	Conformance with Low Voltage Directive 2014/35/EC
EMC requirements for noise emission	EN 61000-6-3
	EN 61000-6-4
EMC requirements for noise immunity	EN 61000-6-1
	EN 61000-6-2

Noise emission

Standards/regulations	EN 55011 (EN 55022)

Electrostatic discharge

Standards/regulations	EN 61000-4-2
Housing	Level 4

Electrostatic discharge

Contact discharge	8 kV
Discharge in air	15 kV
Comments	Criterion B

Electromagnetic HF field

Standards/regulations	EN 61000-4-3

Electromagnetic HF field

Frequency range	80 MHz ... 2 GHz
Test field strength	10 V/m
Comments	Criterion A

Fast transients (burst)

Standards/regulations	EN 61000-4-4

Fast transients (burst)

Input	4 kV (level 4 - asymmetrical)
Output	2 kV (Level 3 - asymmetrical)
Signal	1 kV (Level 2 - asymmetrical)
Comments	Criterion B

Surge voltage load (surge)

Standards/regulations	EN 61000-4-5

Surge voltage load (surge)

Input	4 kV (inst. class 4 - asymmetrical: conductor to ground)
	2 kV (inst. class 4 -symmetrical: conductor to conductor)
Output	0.5 kV (level 1 - asymmetrical: conductor to ground)
	0.5 kV (level 1 - symmetrical: conductor to conductor)
Signal	1 kV (level 2 - asymmetrical: conductor to ground)
Comments	Criterion B

Conducted interference

Standards/regulations	EN 61000-4-6

Conducted interference

Input/output/signal	Level 3 - asymmetrical
Frequency range	0.15 MHz ... 80 MHz
Comments	Criterion A
Voltage	10 V

Voltage dips

Standards/regulations	EN 61000-4-11

Emitted interference

Standards/regulations	EN 61000-6-3
Radio interference voltage in acc. with EN 55011	EN 55011 (EN 55022) Class B, area of application: Industry and residential
Emitted radio interference in acc. with EN 55011	EN 55011 (EN 55022) Class B, area of application: Industry and residential

Drawings

Block diagram

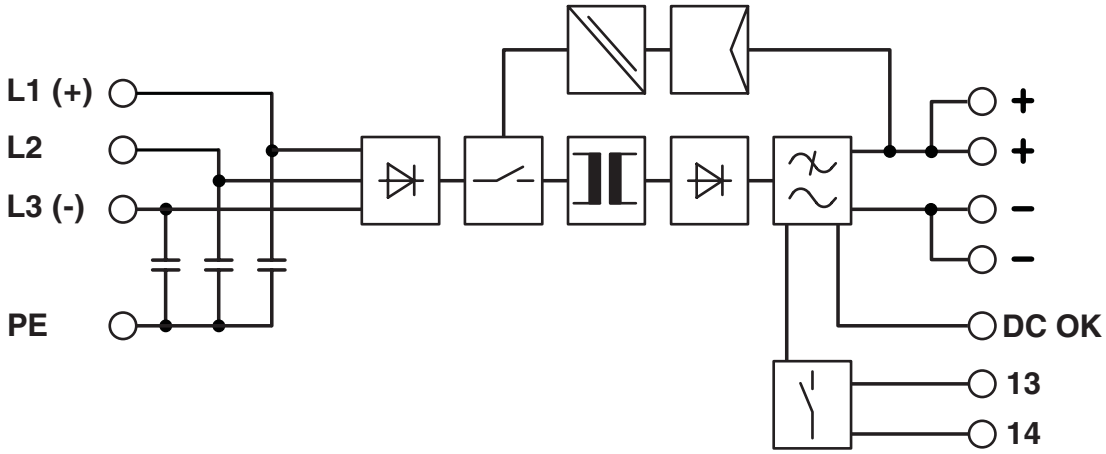

Classifications

UNSPSC

UNSPSC 21.0	39121004

Environmental product compliance

China RoHS

Environment friendly use period (EFUP)	EFUP-25
	An article-related China RoHS declaration table can be found in the download area for the respective article under "Manufacturer declaration". For all articles with EFUP-E, no China RoHS declaration table issued and required.

EU REACH SVHC

REACH candidate substance (CAS No.)	No substance above 0.1 wt%

Phoenix Contact 2026 © - all rights reserved
https://www.phoenixcontact.com

PHOENIX CONTACT Ltd
Halesfield 13, Telford
Shropshire, TF7 4PG
01952 681700
info@phoenixcontact.co.uk