MACX MCR-EX-SL-NAM-R-SP - NAMUR isolation switch amplifier

2924045

https://www.phoenixcontact.com/gb/products/2924045

Please be informed that the data shown in this PDF document is generated from our online catalog. Please find the complete data in the user documentation. Our general terms of use for downloads are valid.



Ex i NAMUR isolation amplifier. For operating proximity sensors and switches in a potentially explosive area. The signals are transmitted by a relay output (changeover contact) to a safe area. Line fault detection (LFD), 3-way isolation, SIL 2.

Your advantages

- Power supply and error indication possible via DIN rail connector
- Installation in zone 2, protection type "n" (EN 60079-15) permitted
- Up to SIL 2 in accordance with EN 61508
- Line fault detection (LFD), can be activated/deactivated, error indicated by flashing red LED with de-excitation of output relay
- Input for NAMUR proximity sensors (EN 60947-5-6), floating contacts or contacts with resistance circuit, [Ex ia] IIC
- Signal output relay (changeover contact)
- Direction of operation can be selected (operating or closed circuit current behavior)
- 3-way electrical isolation
- LED indicators for supply voltage, switching state, and malfunction in accordance with NAMUR NE 44

Commercial data

Item number	2924045
Packing unit	1 pc
Minimum order quantity	1 pc
Sales key	DK1213
Product key	DK1213
GTIN	4046356338059
Weight per piece (including packing)	101.7 g
Weight per piece (excluding packing)	100 g
Customs tariff number	85365019
Country of origin	DE

Technical data

Product properties

Product type	Isolating switch amplifier
Product family	MACX Analog
Application	Digital IN
No. of channels	1
Configuration	DIP switches

System properties

Functionality

Configuration	DIP switches

Electrical properties

Electrical isolation	3-way isolation
Electrical isolation between input and output	yes
Maximum power dissipation for nominal condition	< 650 mW

Electrical isolation

Test voltage	2.5 kV AC (50 Hz, 60 s)

Electrical isolation Input/output IEC/EN 60079-11

Standards/regulations	IEC/EN 60079-11
Rated insulation voltage	375 V_{PP}
Overvoltage category	II
Pollution degree	2

Electrical isolation Input/output/supply, DIN rail connector IEC/EN 61010-1

Standards/regulations	IEC/EN 61010-1
Rated insulation voltage	300 V_{rms}
Overvoltage category	II
Pollution degree	2
Insulation	Safe isolation

Electrical isolation Output/input, supply, TBUS IEC/EN 61010-1

Standards/regulations	IEC/EN 61010-1
Rated insulation voltage	300 V_{rms}
Overvoltage category	III
Pollution degree	2
Insulation	Safe isolation

Electrical isolation Input/supply, DIN rail connector IEC/EN 60079-11

Standards/regulations	IEC/EN 60079-11
Rated insulation voltage	375 V_{PP}

Overvoltage category	II
Pollution degree	2

Supply

Nominal supply voltage	24 V DC -20 % ... +25 %
Supply voltage range	19.2 V DC ... 30 V DC
Max. current consumption	21 mA (24 V DC)
Power dissipation	< 1 W
Power consumption	< 1 W

Input data

Signal: NAMUR

Description of the input	intrinsically safe
Number of inputs	1
Available input sources	NAMUR proximity sensors (IEC/EN 60947-5-6)
	floating switch contacts
	Switch contacts with resistance circuit
Switching threshold "0" signal current	< 1.2 mA (blocking)
Switching threshold "1" signal, current	> 2.1 mA (conductive)
Short-circuit current	8 mA
Switching hysteresis	< 0.2 mA
Line fault detection	< 0.05 mA ... 0.35 mA (Line break)
	< 100 Ω ... 360 Ω (Short circuit)
	Activated /deactivated via DIP switch
Open-circuit voltage	8 V DC

Output data

Switching: Relay

Contact switching type	1 changeover contact
Contact material	$AgSnO_2$, hard gold-plated
Maximum switching voltage	250 V AC (2 A)
	120 V DC (0.2 A)
	30 V DC (2 A)
Maximum switching power	500 VA
Recommended minimum load	5 V / 10 mA
Switching frequency	≤ 20 Hz (without load)

Signal

Number of outputs	1

Connection data

Connection method	Push-in connection
Stripping length	10 mm

Conductor cross-section rigid	0.2 mm² ... 2.5 mm²
Conductor cross-section flexible	0.2 mm² ... 2.5 mm²
Conductor cross-section flexible (2 conductors with same cross section)	0.25 mm² ... 0.34 mm² (TWIN ferrule without plastic sleeve)
	0.5 mm² ... 1.5 mm² (TWIN ferrule with plastic sleeve)
Conductor cross-section AWG	24 ... 14
	24 ... 22 (TWIN ferrule without plastic sleeve)
	20 ... 16 (TWIN ferrule with plastic sleeve)

Ex data

Ex installation (EPL)	Gc
	Div. 2
Ex i circuits (EPL)	[Ga]
	[Da]
	[Ma]
	[Div. 1]

Safety data

Max. internal inductance L_i	negligible
Max. internal capacitance C_i	11 nF
Max. output voltage U_o	9.6 V
Max. output current I_o	10 mA
Max. output power P_o	25 mW
Safety-related maximum voltage U_m	253 V AC
	125 V DC
IIA/I (simple circuit): Max. external inductivity L_o / Max. external capacitance C_o	1000 mH / 210 µF
IIB/IIIC (simple circuit): Max. external inductivity L_o / Max. external capacitance C_o	1000 mH / 26 µF
IIC (simple circuit): Max. external inductivity L_o / Max. external capacitance C_o	300 mH / 3.6 µF
IIC (mixed circuit): Max. external inductivity L_o / Max. external capacitance C_o	100 mH / 500 nF, 50 mH / 570 nF, 5 mH / 590 nF
I/IIB/IIA/IIIC (mixed circuit): Max. external inductivity L_o / Max. external capacitance C_o	100 mH / 1 µF

Interfaces

Data

No. of channels	0

Signaling

Status display	Green LED (supply voltage)
	LED yellow (switching state)
	Red LED (line errors)

Dimensions

Dimensional drawing	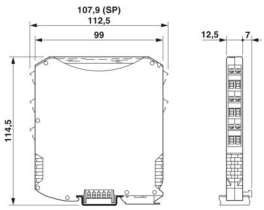
Width	12.5 mm
Height	107.9 mm
Depth	113.7 mm
Depth NS 35/7,5	114.5 mm (Snapped onto DIN rail NS 35/7,5 in accordance with EN 60715)

Material specifications

Color	gray (RAL 7042)
Flammability rating according to UL 94 (Housing)	V0 (Housing)
Housing material	PA 6.6-FR

Environmental and real-life conditions

Ambient conditions

Degree of protection	IP20 (not assessed by UL)
Ambient temperature (operation)	-40 °C ... 60 °C (Any mounting position)
	-40 °C ... 70 °C (Derating)
Ambient temperature (storage/transport)	-40 °C ... 85 °C
Permissible humidity (operation)	10 % ... 95 % (non-condensing)
Permissible humidity (storage/transport)	5 % ... 95 % (non-condensing)

Altitude range (≤ 2000 m)

Altitude	≤ 2000 m (The technical data refers to altitudes ≤2000 m above mean sea level. For altitudes >2000 m above mean sea level, refer to the data sheet.)
Ambient temperature (operation)	-40 °C ... 60 °C
	-40 °C ... 70 °C (Derating)
Rated insulation voltage	253 V AC (Power supply, input / output)
	125 V DC (Power supply, input / output)

Altitude range (≤ 3000 m)

Height range	> 2000 m ... 3000 m
Ambient temperature (operation)	-40 °C ... 54 °C
	-40 °C ... 63 °C (Derating)
Rated insulation voltage	190 V AC (Power supply, input / output)
	110 V DC (Power supply, input / output)

Altitude range (≤ 4000 m)

Height range	> 3000 m ... 4000 m
Ambient temperature (operation)	-40 °C ... 48 °C
	-40 °C ... 56 °C (Derating)
Rated insulation voltage	60 V AC/DC (Power supply, input / output)

Altitude range (≤ 5000 m)

Height range	> 4000 m ... 5000 m
Ambient temperature (operation)	-40 °C ... 42 °C
	-40 °C ... 49 °C (Derating)
Rated insulation voltage	60 V AC/DC (Power supply, input / output)

Approvals

CE

Certificate	CE-compliant
Note	and EN 61326

ATEX

Identification	Ⓔx II (1) G [Ex ia Ga] IIC
	Ⓔx II (1) D [Ex ia Da] IIIC
	Ⓔx II 3 (1) G Ex ec [ia Ga] nC IIC T4 Gc
	Ⓔx I (M1) [Ex ia Ma] I
Certificate	IBExU 07 ATEX 1069 X

IECEx

Identification	[Ex ia Ga] IIC
	[Ex ia Da] IIIC
	Ex ec [ia Ga] nC IIC T4 Gc
	[Ex ia Ma] I
Certificate	IECEx IBE 08.0001X

CCC / China-Ex

Identification	[Ex ia Ga] IIC
	[Ex ia Da] IIIC
	Ex ec nC [ia Ga] IIC T4 Gc
Certificate	2022122316115975

UL, USA/Canada

Identification	UL 61010 Listed
	Class I, Div. 2, Groups A, B, C, D T4
	Class I, Div. 2, Groups IIC, IIB, IIA T4
	Associated apparatus for use in Class I, Division 1, Groups A,B,C,D
	Associated apparatus for use in Class II, Div.1 Groups E,F,G

	Associated apparatus for use in Class III, Division 1
	Associated apparatus for use in Class I, Zone 0,1,2, Groups IIC,IIB,IIA
Certificate	C.D.-No 83104549

KC-s

Identification	[Ex ia] IIC/IIB
Certificate	17-KA4BO-0408X

Shipbuilding approval

Certificate	DNV GL TAA00000AG

Safety Integrity Level (SIL, IEC 61508)

Identification	2
Certificate	IN-AT-AS-MRL-24-00163

Systematic Capability

Identification	3

INMETRO

Identification	[Ex ia Ga] IIC
	[Ex ia Da] IIIC
	Ex ec nC [ia Ga] IIC T4 Gc
	[Ex ia Ma] I
Certificate	DNV 18.0114 X

Shipbuilding data

Temperature	B
Humidity	B
Vibration	A
EMC	B
Enclosure	Required protection according to the Rules shall be provided upon installation on board

EMC data

Noise immunity	EN 61000-6-2
	EN 61326

Standards and regulations

Electrical isolation	3-way isolation

GB Standard

Standards/regulations	GB/T 3836.1
	GB/T 3836.3
	GB/T 3836.4
	GB/T 3836.8

Mounting

Mounting type	DIN rail mounting

Drawings

Dimensional drawing

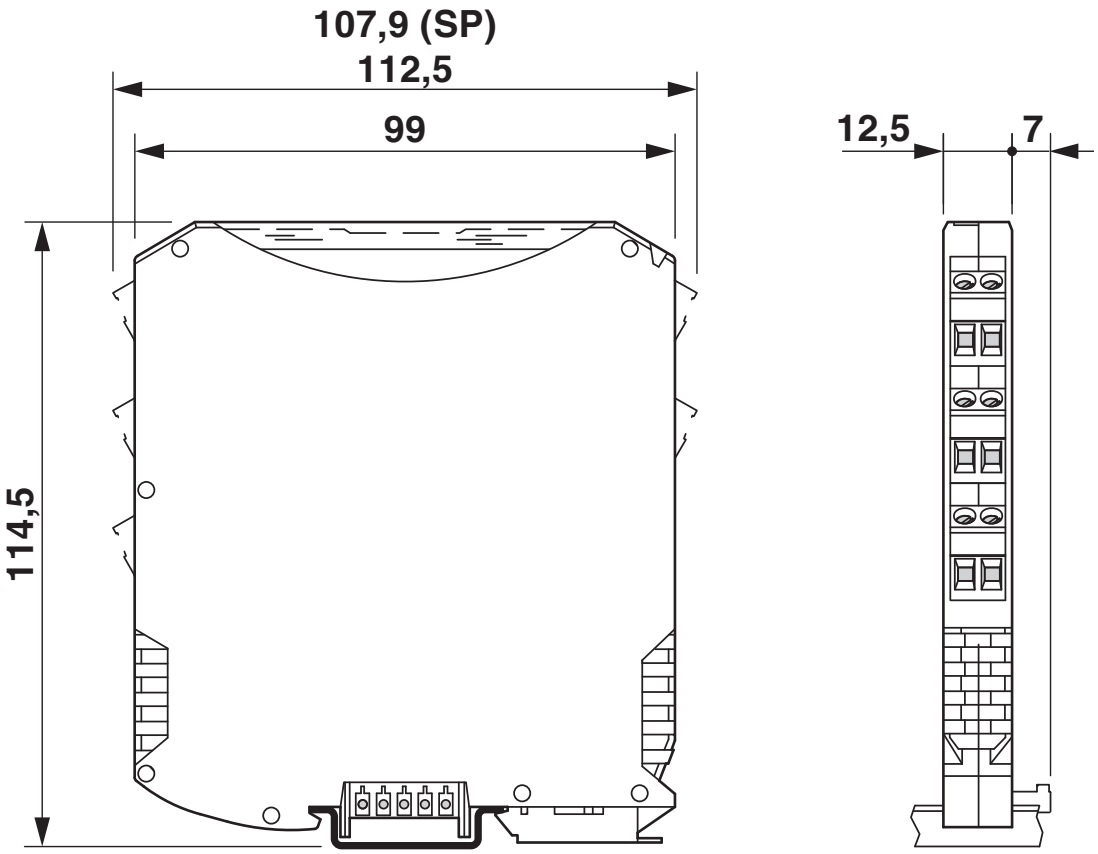

Block diagram

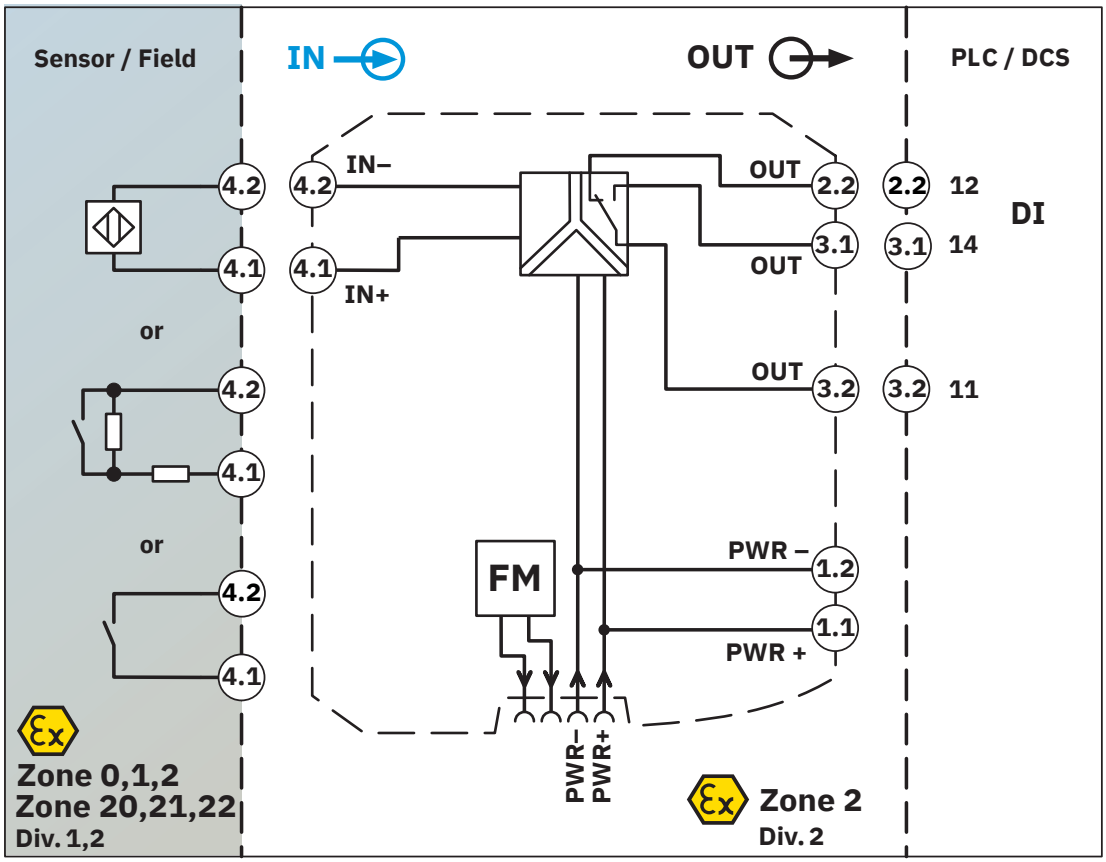

Approvals

To download certificates, visit the product detail page: https://www.phoenixcontact.com/gb/products/2924045

UL Listed
Approval ID: E330267

cUL Listed
Approval ID: E330267

Functional Safety
Approval ID: 07-06-39 R005 V2R2

DNV
Approval ID: TAA00000AG

ECAS
Approval ID: 163683 E25 08 169506

TUEV Austria FS
Approval ID: IN-AT-AS-24-00163

cULus Listed
Approval ID: E330267

DNV
Approval ID: TAA000020C

IECEx
Approval ID: IECEx IBE 08.0001X

cUL Listed
Approval ID: E199827

UL Listed
Approval ID: E199827

ATEX
Approval ID: IBExU07ATEX1069

INMETRO
Approval ID: DNV 18.0114 X

CCC
Approval ID: 2022122316115975

cULus Listed
Approval ID: E199827

Classifications

ECLASS

ECLASS-13.0	27210121
ECLASS-15.0	27210121

ETIM

ETIM 10.0	EC001485

UNSPSC

UNSPSC 21.0	39121000

Environmental product compliance

EU RoHS

Fulfills EU RoHS substance requirements	Yes
Exemption	7(a), 7(a)-I, 7(c)-I

China RoHS

Environment friendly use period (EFUP)	EFUP-50
	An article-related China RoHS declaration table can be found in the download area for the respective article under "Manufacturer declaration". For all articles with EFUP-E, no China RoHS declaration table issued and required.

EU REACH SVHC

REACH candidate substance (CAS No.)	Lead(CAS: 7439-92-1)
SCIP	501c891d-a118-4e8b-bbb5-3e252726e051

Phoenix Contact 2026 © - all rights reserved
https://www.phoenixcontact.com

PHOENIX CONTACT Ltd
Halesfield 13, Telford
Shropshire, TF7 4PG
01952 681700
info@phoenixcontact.co.uk