MACX MCR-EX-SL-RPSSI-I-SP - Repeater power supply

2924016

https://www.phoenixcontact.com/gb/products/2924016

Please be informed that the data shown in this PDF document is generated from our online catalog. Please find the complete data in the user documentation. Our general terms of use for downloads are valid.



Ex i repeater power supply and input signal conditioner, HART-transparent. Transmits supplied or active 0/4 … 20 mA signals from the Ex area to a load (active or passive) in the safe area. 3-way electrical isolation, SIL 2 in accordance with IEC 61508, with Push-in connection

Your advantages

- 0/4 mA ... 20 mA input, intrinsically safe, [Ex ia], powered and not powered
- Measuring transducer supply voltage > 16 V
- Output: 0/4 mA ... 20 mA, active up to 1000 Ω load or passive
- Bidirectional HART signal transmission
- Error indication according to NAMUR NE 43
- SIL 2 according to IEC/EN 61508
- Installation in Ex zone 2 permitted
- 3-way electrical isolation
- Power supply possible via DIN rail connector
- Plug-in connection terminals, push-in connection technology
- Housing width: 12.5 mm
- Minimal power dissipation
- High transmission accuracy

Commercial data

Item number	2924016
Packing unit	1 pc
Minimum order quantity	1 pc
Sales key	DK1211
Product key	DK1211
GTIN	4046356338066
Weight per piece (including packing)	176 g
Weight per piece (excluding packing)	160 g
Customs tariff number	85437090
Country of origin	DE

Technical data

Product properties

Product type	Repeater power supply
Product family	MACX Analog
Application	Analog IN
No. of channels	1

Electrical properties

Electrical isolation	3-way isolation
Electrical isolation between input and output	yes
Signal transmission behavior	In = Out
Step response (10-90%)	< 200 µs (for jump 4 mA ... 20 mA, load 600 Ω)
	< 600 µs (for jump 0 mA ... 20 mA, load 600 Ω)
Maximum temperature coefficient	< 0.01 %/K
Temperature coefficient, typical	< 0.004 %/K
Maximum transmission error	< 0.1 % (of final value 20 mA)
Transmission error, typical	< 0.05 % (of final value 20 mA)
Reverse polarity protection	yes

Electrical isolation

Test voltage	2.5 kV AC (50 Hz, 60 s)
Overvoltage category	II
Pollution degree	2

Electrical isolation Input/output/power supply IEC/EN 61010-1

Standards/regulations	IEC/EN 61010-1
Rated insulation voltage	300 V_{rms}
Insulation	Safe isolation

Electrical isolation Input/output IEC/EN 60079-11

Standards/regulations	IEC/EN 60079-11
Rated insulation voltage	265 V_{rms}

Electrical isolation Input/power supply IEC/EN 60079-11

Standards/regulations	IEC/EN 60079-11
Rated insulation voltage	265 V_{rms}

Electrical isolation Output/supply IEC/EN 60079-7

Standards/regulations	IEC/EN 60079-7
Rated insulation voltage	265 V_{rms}

Supply

Designation	Repeater power supply operation
Nominal supply voltage	24 V DC -20 % ... +25 %
Supply voltage range	19.2 V DC ... 30 V DC

Max. current consumption	< 76 mA (24 V DC / 20 mA / 1000 Ω)
	< 55 mA (24 V DC / 20 mA / 250 Ω)
Power dissipation	< 1.1 W (24 V DC / 20 mA / 1000 Ω)
	< 0.95 W (24 V DC / 20 mA / 250 Ω)
	< 1.2 W (24 V DC / 20 mA / 0 Ω)
Power consumption (Output active)	< 1.8 W (20 mA / 1000 Ω)
	< 1.3 W (20 mA / 250 Ω)

Supply

Designation	Signal conditioner operation
Nominal supply voltage	24 V DC -20 % ... +25 %
Supply voltage range	19.2 V DC ... 30 V DC
Max. current consumption	< 44 mA (24 V DC / 20 mA / 1000 Ω)
	< 27 mA (24 V DC / 20 mA / 250 Ω)
Power dissipation	< 0.75 W (24 V DC / 20 mA / 1000 Ω)
	< 0.65 W (24 V DC / 20 mA / 250 Ω)
	< 0.95 W (24 V DC / 20 mA / 0 Ω)

Input data

Signal: Repeater power supply operation

Description of the input	Active current input, intrinsically safe
Number of inputs	1
Input signal	Current
Current input signal	4 mA ... 20 mA
Current limitation	25 mA
Transmitter supply voltage	> 16 V (20 mA)
	> 15.3 V (22.5 mA)
Polarization and surge protection	Yes
Underload/overload signal range	0 mA ... 24 mA (Extended transmission range for diagnostics)

Signal: Signal conditioner operation

Description of the input	Passive current input, intrinsically safe
Current input signal	0 mA ... 20 mA
	4 mA ... 20 mA
Voltage drop	< 3.5 V (in input isolating amplifier operation)
Underload/overload signal range	0 mA ... 24 mA (Extended transmission range for diagnostics)

Output data

Signal: Repeater power supply operation

Output description	Current output (active and passive)
Number of outputs	1
Current output signal	4 mA ... 20 mA (active)
	4 mA ... 20 mA (14 ... 26 V ext. source voltage)
Load/output load current output	< 1000 Ω (20 mA)

	< 825 Ω (24 mA)
Output ripple	< 20 mV_{rms}
Output behavior in the event of an error	0 mA (Cable break in the input)
	≥ 22.5 mA (Cable short-circuit in the input)
Underload/overload signal range	0 mA ... 24 mA (Extended transmission range for diagnostics)

Signal: Signal conditioner operation

Output description	Current output (active and passive)
Current output signal	0 mA ... 20 mA (active)
	4 mA ... 20 mA (active)
	0 mA ... 20 mA (14 ... 26 V ext. source voltage)
	4 mA ... 20 mA (14 ... 26 V ext. source voltage)
Load/output load current output	< 1000 Ω (20 mA)
	< 825 Ω (24 mA)
Output ripple	< 20 mV_{rms}
Output behavior in the event of an error	0 mA (Cable break in the input)
	0 mA (Cable short-circuit in the input)
Underload/overload signal range	0 mA ... 24 mA (Extended transmission range for diagnostics)

Connection data

Connection method	Push-in connection
Stripping length	10 mm
Conductor cross-section rigid	0.2 mm² ... 2.5 mm²
Conductor cross-section flexible	0.2 mm² ... 2.5 mm²
Conductor cross-section flexible (2 conductors with same cross section)	0.25 mm² ... 0.34 mm² (TWIN ferrule without plastic sleeve)
	0.5 mm² ... 1.5 mm² (TWIN ferrule with plastic sleeve)
Conductor cross-section AWG	24 ... 14
	24 ... 22 (TWIN ferrule without plastic sleeve)
	20 ... 16 (TWIN ferrule with plastic sleeve)

Ex data

Ex installation (EPL)	Gc
	Div. 2
Ex i circuits (EPL)	[Ga]
	[Da]
	[Ma]
	[Div. 1]

Safety data: Repeater power supply operation

Max. output voltage U_o	25.2 V
Max. output current I_o	93 mA
Max. output power P_o	587 mW
Safety-related maximum voltage U_m	253 V AC
	125 V DC

I (simple circuit): Max. external inductivity L_o / Max. external capacitance C_o	40 mH / 4.8 µF
IIA (simple circuit): Max. external inductivity L_o / Max. external capacitance C_o	26 mH / 2.9 µF
IIB (simple circuit): Max. external inductivity L_o / Max. external capacitance C_o	14 mH / 820 nF
IIC (simple circuit): Max. external inductivity L_o / Max. external capacitance C_o	3 mH / 107 nF
IIA (mixed circuit): Max. external inductivity L_o / Max. external capacitance C_o	26 mH / 470 nF, 20 mH / 570 nF, 1 mH / 630 nF, 0.5 mH / 720 nF, 0.1 mH / 1.1 µF, 0.005 mH / 2.9 µF
IIB/III (mixed circuit): Max. external inductivity L_o / Max. external capacitance C_o	16 mH / 370 nF, 500 µH / 510 nF, 200 µH / 660 nF, 100 µH / 820 nF
IIC (mixed circuit): Max. external inductivity L_o / Max. external capacitance C_o	2.2 mH / 47 nF, 2 mH / 49 nF, 1 mH / 63 nF, 500 µH / 80 nF, 200 µH / 107 nF
I (mixed circuit): Max. external inductivity L_o / Max. external capacitance C_o	37 mH / 0.54 µF, 0.35 mH / 1 µF, 0.009 mH / 2.9 µF, 0.001 mH / 4.15 µF

Safety data: Signal conditioner operation

Input voltage U_i	≤ 30 V
Input current I_i	≤ 150 mA
Max. internal inductance L_i	negligible
Max. internal capacitance C_i	negligible
Safety-related maximum voltage U_m	253 V AC
	125 V DC

Interfaces

Data communication (bypass)

HART function	HART transparency
Protocols supported	HART

Signaling

Status display	Green LED (supply voltage)

Dimensions

Dimensional drawing	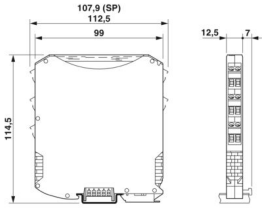
Width	12.5 mm
Height	107.9 mm
Depth	113.7 mm
Depth NS 35/7,5	114.5 mm (Snapped onto DIN rail NS 35/7,5 in accordance with EN 60715)

Material specifications

Color	gray (RAL 7042)
Flammability rating according to UL 94 (Housing)	V0 (Housing)
Housing material	PA 6.6-FR

Environmental and real-life conditions

Ambient conditions

Degree of protection	IP20 (not assessed by UL)
Ambient temperature (operation)	-40 °C ... 60 °C (Any mounting position)
	-40 °C ... 70 °C (Derating)
Ambient temperature (storage/transport)	-40 °C ... 80 °C
Permissible humidity (operation)	10 % ... 95 % (non-condensing)

Altitude range (≤ 2000 m)

Altitude	≤ 2000 m (The technical data refers to altitudes ≤2000 m above mean sea level. For altitudes >2000 m above mean sea level, refer to the data sheet.)
Ambient temperature (operation)	-40 °C ... 60 °C
	-40 °C ... 70 °C (Derating)
Rated insulation voltage	375 V_{PP} (Power supply, input / output)

Altitude range (≤ 3000 m)

Height range	> 2000 m ... 3000 m
Ambient temperature (operation)	-40 °C ... 54 °C
	-40 °C ... 63 °C (Derating)
Rated insulation voltage	190 V AC (Power supply, input / output)
	110 V DC (Power supply, input / output)

Altitude range (≤ 4000 m)

Height range	> 3000 m ... 4000 m
Ambient temperature (operation)	-40 °C ... 48 °C
	-40 °C ... 56 °C (Derating)
Rated insulation voltage	60 V AC/DC (Power supply, input / output)

Altitude range (≤ 5000 m)

Height range	> 4000 m ... 5000 m
Ambient temperature (operation)	-40 °C ... 42 °C
	-40 °C ... 49 °C (Derating)
Rated insulation voltage	60 V AC/DC (Power supply, input / output)

Approvals

CE

Certificate	CE-compliant
Note	and EN 61326

ATEX

Identification	Ⓔx II (1) G [Ex ia Ga] IIC
	Ⓔx II (1) D [Ex ia Da] IIIC
	Ⓔx II 3(1) G Ex ec [ia Ga] IIC T4 Gc
	Ⓔx I (M1) [Ex ia Ma] I
Certificate	BVS 08 ATEX E 054X

IECEx

Identification	[Ex ia Ga] IIC
	[Ex ia Da] IIIC
	Ex ec [ia Ga] IIC T4 Gc
	[Ex ia Ma] I
Certificate	IECEx BVS 08.0016X

CCC / China-Ex

Identification	[Ex ia Ga] IIC
	[Ex ia Da] IIIC
	Ex ec [ia Ga] IIC T4 Gc
Certificate	2022122316115973

UL, USA/Canada

Identification	UL 61010 Listed
	Class I, Div. 2, Groups A, B, C, D T4
	Class I, Div. 2, Groups IIC, IIB, IIA T4
	Associated apparatus for use in Class I, Division 1, Groups A,B,C,D
	Associated apparatus for use in Class II, Div.1 Groups E,F,G
	Associated apparatus for use in Class III, Division 1
	Associated apparatus for use in Class I, Zone 0,1,2, Groups IIC,IIB,IIA
Certificate	cULus C.D.-No 83104549

Shipbuilding approval

Certificate	DNV GL TAA000020C

Safety Integrity Level (SIL, IEC 61508)

Identification	2
Certificate	IN-AT-AS-MRL-2300149

Systematic Capability

Identification	3

KC-s

Identification	[Ex ia] IIC/IIB
Certificate	17-KA4BO-0400X

INMETRO

	[Ex ia Ga] IIC

Identification	[Ex ia Da] IIIC
	Ex ec [ia Ga] IIC T4 Gc
	[Ex ia Ma] I
Certificate	DNV 18.0136 X

Shipbuilding data

Temperature	B
Humidity	B
Vibration	A
EMC	A
Enclosure	Required protection according to the Rules shall be provided upon installation on board

EMC data

Electromagnetic compatibility	Conformance with EMC directive
Noise immunity	EN 61000-6-2
Note	When being exposed to interference, there may be minimal deviations.

Noise emission

Standards/regulations	EN 61000-6-4

Electromagnetic HF field

Designation	Electromagnetic RF field
Standards/regulations	EN 61000-4-3
Typical deviation from the upper range value	1 %

Fast transients (burst)

Designation	Fast transients (burst)
Standards/regulations	EN 61000-4-4
Typical deviation from the upper range value	1 %

Conducted interference

Designation	Conducted interferences
Standards/regulations	EN 61000-4-6
Typical deviation from the upper range value	1 %

Standards and regulations

Electrical isolation	3-way isolation

GB Standard

Standards/regulations	GB/T 3836.1
	GB/T 3836.3
	GB/T 3836.4

Mounting

Mounting type	DIN rail mounting

Drawings

Dimensional drawing

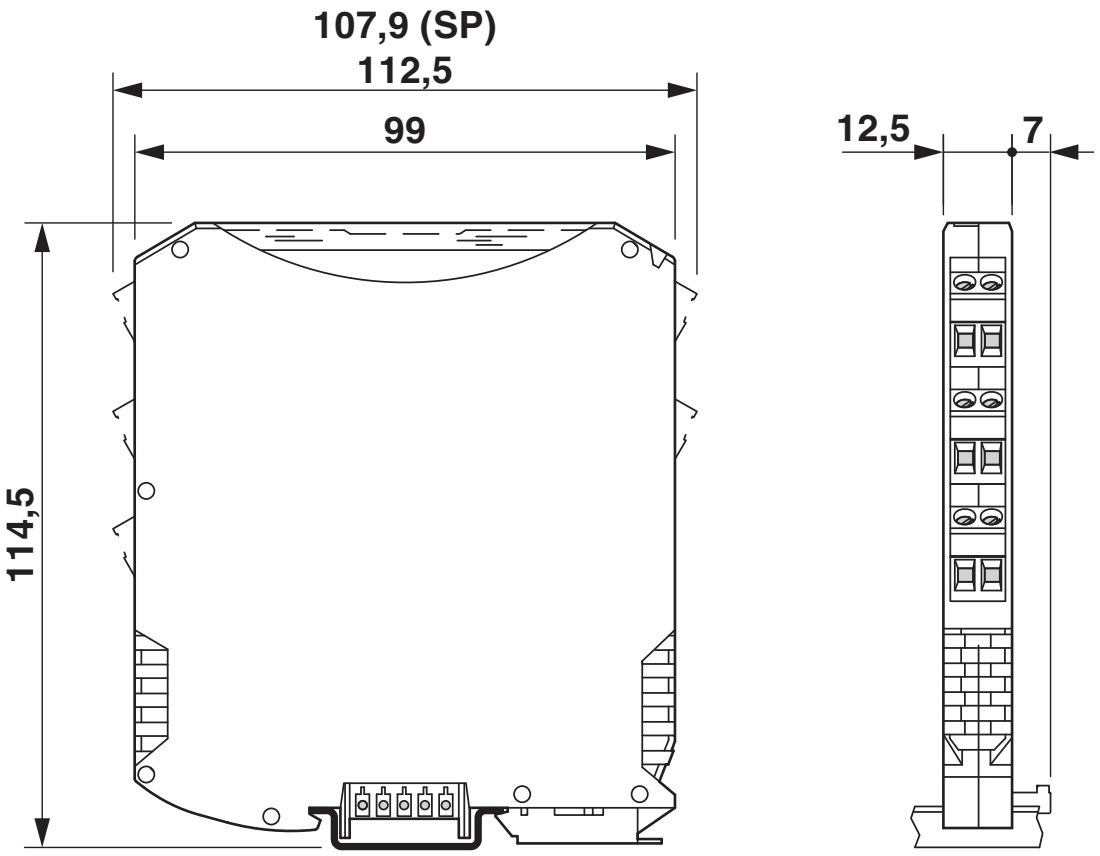

Diagram

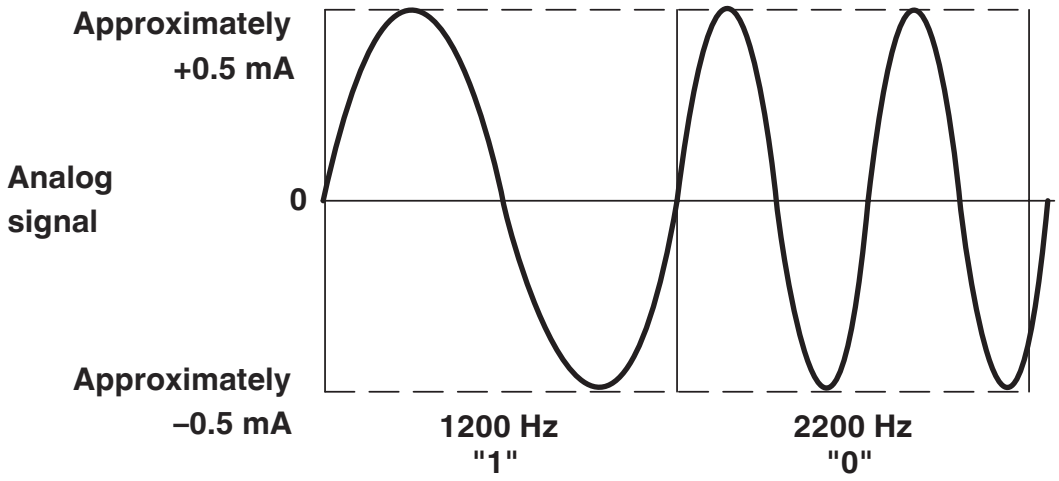

Signal transmission analog and digital at the same time

Block diagram

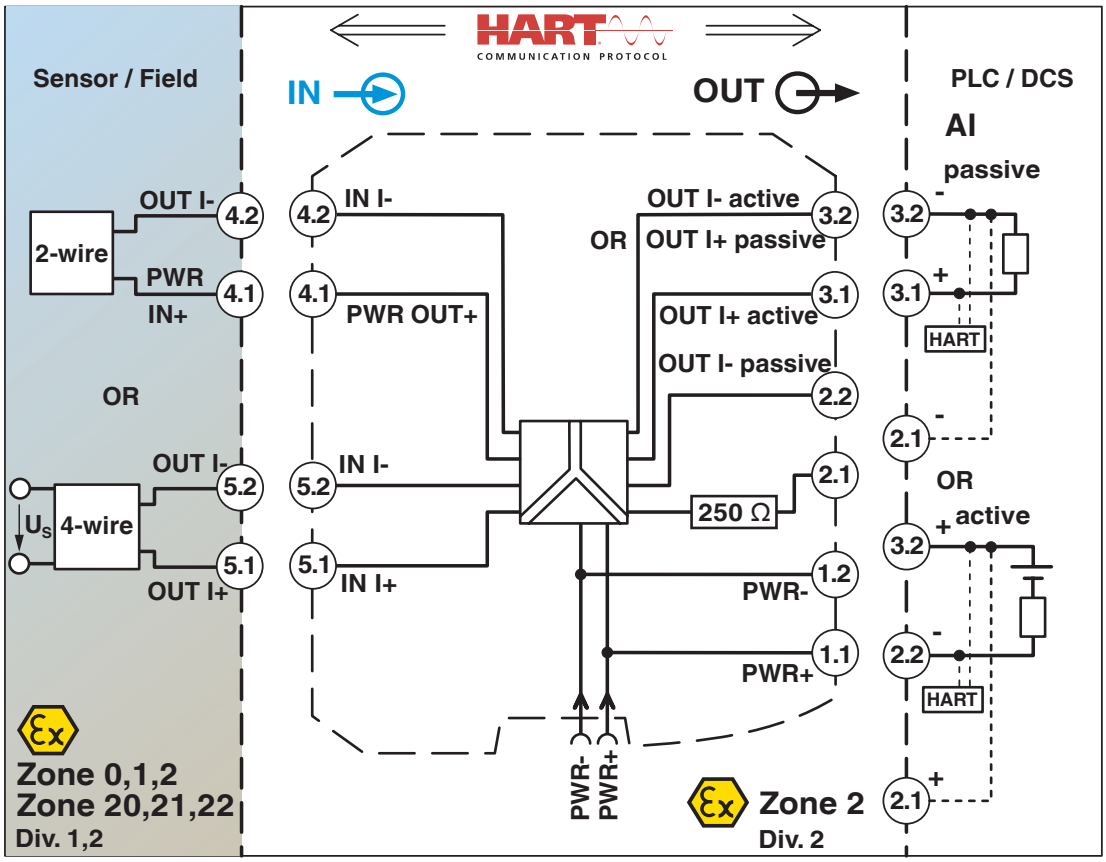

Approvals

To download certificates, visit the product detail page: https://www.phoenixcontact.com/gb/products/2924016

UL Listed
Approval ID: E330267

cUL Listed
Approval ID: E330267

TUEV Austria FS
Approval ID: IN-AT-AS-MRL-23-0149

cULus Listed
Approval ID: E330267

IECEx
Approval ID: IECEx BVS 08.0016X

CCC
Approval ID: 2022122316115973

cUL Listed
Approval ID: E199827

UL Listed
Approval ID: E199827

ATEX
Approval ID: BVS 08 ATEX E 054X

INMETRO
Approval ID: DNV 18.0136 X

cULus Listed
Approval ID: E199827

Classifications

ECLASS

ECLASS-13.0	27210120
ECLASS-15.0	27210120

ETIM

ETIM 10.0	EC002653

UNSPSC

UNSPSC 21.0	39121000

Environmental product compliance

EU RoHS

Fulfills EU RoHS substance requirements	Yes
Exemption	6(c), 7(a), 7(a)-I, 7(c)-I

China RoHS

Environment friendly use period (EFUP)	EFUP-50
	An article-related China RoHS declaration table can be found in the download area for the respective article under "Manufacturer declaration". For all articles with EFUP-E, no China RoHS declaration table issued and required.

EU REACH SVHC

REACH candidate substance (CAS No.)	Lead(CAS: 7439-92-1)
SCIP	7bcc266a-ee45-4972-ac9d-584549031e81

Phoenix Contact 2026 © - all rights reserved
https://www.phoenixcontact.com

PHOENIX CONTACT Ltd
Halesfield 13, Telford
Shropshire, TF7 4PG
01952 681700
info@phoenixcontact.co.uk