ETD-BL-1T-OFF-CC- 30MIN - Timer relay

2917467

https://www.phoenixcontact.com/gb/products/2917467

Please be informed that the data shown in this PDF document is generated from our online catalog. Please find the complete data in the user documentation. Our general terms of use for downloads are valid.



Timer relay with off delay (with control contact) and an adjustable time range (0.3 min - 30 min), with screw connection

Product description

Compact timer relay in 6.2 mm housing for controlling time sequences.
The time is set on the front of the device using a labeled thumbwheel, which is recessed to protect against accidental modification. A screwdriver is used to change the settings (blade width 2.5 mm).
The compact timer relays are available with different time ranges as well as with a screw, spring-cage, and push-in connection.

Your advantages

- 6.2 mm narrow design width
- High level of setting accuracy thanks to labeled and illuminated thumb wheel

Commercial data

Item number	2917467
Packing unit	1 pc
Minimum order quantity	1 pc
Sales key	DK66ZZ
Product key	DK66ZZ
GTIN	4046356367554
Weight per piece (including packing)	71.4 g
Weight per piece (excluding packing)	71.4 g
Customs tariff number	85364900
Country of origin	DE

Technical data

Product properties

Product type	Timer relay
Operating mode	100% operating factor
Mechanical service life	approx. 2x 10^7 cycles

Insulation characteristics

Insulation	Basic insulation
Overvoltage category	III
Pollution degree	2

Electrical properties

Service life electrical	approx. 2x 10^5 cycles at ohmic load, 1000 VA
Rated insulation voltage	300 V AC
Rated surge voltage	6 kV

Input data

Input voltage range	24 V DC (19.2 V DC ...30 V DC)
Nominal current typ.	15 mA (Relay ON)
	7 mA (Relay OFF)
Function	OFF-CC: Off delay with control contact
Setting range time	0.3 min ... 30 min
Setting accuracy	≤ 2.5 % (of scale end value)
Repeat accuracy	≤ 0.5 % (From the upper range value)

Control

Connection name	Non-floating, terminals A1-B1
Control pulse length	min. 50 ms

Output data

Switching

Contact switching type	1 floating changeover contact
Output fuse	6.3 A (fast-blow)

Connection data

Connection method	Screw connection
Stripping length	8 mm
Conductor cross-section rigid	0.14 mm² ... 2.5 mm²
Conductor cross-section flexible	0.14 mm² ... 2.5 mm²
Conductor cross-section AWG	30 ... 12
Tightening torque	0.6 Nm ... 0.8 Nm
	5 lb_f-in. ... 7 lb_f-in.

Signaling

Status display	Green LED (POWER)
	Yellow LED (relay active)

Dimensions

Width	6.2 mm
Height	80 mm
Depth	86 mm

Material specifications

Color	gray (RAL 7042)
Flammability rating according to UL 94	V0
Housing insulation material	Polyamide PA, self-extinguishing

Environmental and real-life conditions

Ambient conditions

Degree of protection	IP20
Ambient temperature (operation)	-20 °C ... 65 °C
Ambient temperature (storage/transport)	-25 °C ... 80 °C
Permissible humidity (operation)	15 % ... 85 %

Approvals

CE

Certificate	CE-compliant

UKCA

Certificate	UKCA-compliant

ATEX

Identification	Ⓔx II 3 G Ex nA nC IIC T4 Gc X

UL, USA/Canada

Identification	UL/C-UL Listed UL 508

GL

Identification	GL EMC 1 C

EMC data

Electromagnetic compatibility	Conformance with EMC directive
Low Voltage Directive	Conformance with Low Voltage Directive
Noise immunity	EN 61000-6-2
Note	When being exposed to interference, there may be minimal deviations.

Noise emission

Standards/regulations	EN 61000-6-4

Standards and regulations

Standards/regulations	EN 50178

Mounting

Mounting type	DIN rail mounting
Assembly note	on standard DIN rail NS 35 in accordance with EN 60715
Mounting position	any

Drawings

Block diagram

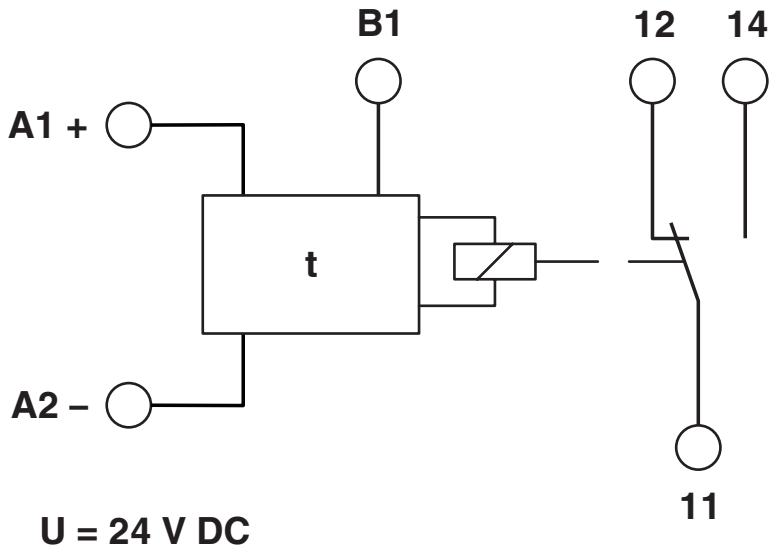

Classifications

UNSPSC

UNSPSC 21.0	39122329

Environmental product compliance

EU RoHS

Fulfills EU RoHS substance requirements	Yes
Exemption	7(a), 7(c)-I

China RoHS

Environment friendly use period (EFUP)	EFUP-50
	An article-related China RoHS declaration table can be found in the download area for the respective article under "Manufacturer declaration". For all articles with EFUP-E, no China RoHS declaration table issued and required.

EU REACH SVHC

REACH candidate substance (CAS No.)	Lead(CAS: 7439-92-1)

Phoenix Contact 2026 © - all rights reserved
https://www.phoenixcontact.com

PHOENIX CONTACT Ltd
Halesfield 13, Telford
Shropshire, TF7 4PG
01952 681700
info@phoenixcontact.co.uk