# ETD-BL-1T-OFF-CC-300S - Timer relay

2917463

https://www.phoenixcontact.com/gb/products/2917463

Please be informed that the data shown in this PDF document is generated from our online catalog. Please find the complete data in the user documentation. Our general terms of use for downloads are valid.



Timer relay with off delay (with control contact) and an adjustable time range (3 s - 300 s), with screw connection

## Product description

Compact timer relay in 6.2 mm housing for controlling time sequences.
The time is set on the front of the device using a labeled thumbwheel, which is recessed to protect against accidental modification. A screwdriver is used to change the settings (blade width 2.5 mm).
The compact timer relays are available with different time ranges as well as with a screw, spring-cage, and push-in connection.

## Your advantages

- 6.2 mm narrow design width
- High level of setting accuracy thanks to labeled and illuminated thumb wheel

## Commercial data

| | |
|---|---|
| Item number | 2917463 |
| Packing unit | 1 pc |
| Minimum order quantity | 1 pc |
| Sales key | DK66ZZ |
| Product key | DK66ZZ |
| GTIN | 4046356367776 |
| Weight per piece (including packing) | 70.2 g |
| Weight per piece (excluding packing) | 50.9 g |
| Customs tariff number | 85364900 |
| Country of origin | DE |

# Technical data

## Product properties

| | |
|---|---|
| Product type | Timer relay |
| Operating mode | 100% operating factor |
| Mechanical service life | approx. 2x $10^7$ cycles |

### Insulation characteristics

| | |
|---|---|
| Insulation | Basic insulation |
| Overvoltage category | III |
| Pollution degree | 2 |

## Electrical properties

| | |
|---|---|
| Service life electrical | approx. 2x $10^5$ cycles at ohmic load, 1000 VA |
| Rated insulation voltage | 300 V AC |
| Rated surge voltage | 6 kV |

## Input data

| | |
|---|---|
| Input voltage range | 24 V DC (19.2 V DC ...30 V DC) |
| Nominal current typ. | 15 mA (Relay ON) |
| | 7 mA (Relay OFF) |
| Function | OFF-CC: Off delay with control contact |
| Setting range time | 3 s ... 300 s |
| Setting accuracy | ≤ 2.5 % (of scale end value) |
| Repeat accuracy | ≤ 0.5 % (From the upper range value) |

### Control

| | |
|---|---|
| Connection name | Non-floating, terminals A1-B1 |
| Control pulse length | min. 50 ms |

## Output data

### Switching

| | |
|---|---|
| Contact switching type | 1 floating changeover contact |
| Output fuse | 6.3 A (fast-blow) |

## Connection data

| | |
|---|---|
| Connection method | Screw connection |
| Stripping length | 8 mm |
| Conductor cross-section rigid | 0.14 mm² ... 2.5 mm² |
| Conductor cross-section flexible | 0.14 mm² ... 2.5 mm² |
| Conductor cross-section AWG | 30 ... 12 |
| Tightening torque | 0.6 Nm ... 0.8 Nm |
| | 5 $lb_f$-in. ... 7 $lb_f$-in. |

## Signaling

| | |
|---|---|
| Status display | Green LED (POWER) |
| | Yellow LED (relay active) |

## Dimensions

| | |
|---|---|
| Width | 6.2 mm |
| Height | 80 mm |
| Depth | 86 mm |

## Material specifications

| | |
|---|---|
| Color | gray (RAL 7042) |
| Flammability rating according to UL 94 | V0 |
| Housing insulation material | Polyamide PA, self-extinguishing |

## Environmental and real-life conditions

### Ambient conditions

| | |
|---|---|
| Degree of protection | IP20 |
| Ambient temperature (operation) | -20 °C ... 65 °C |
| Ambient temperature (storage/transport) | -25 °C ... 80 °C |
| Permissible humidity (operation) | 15 % ... 85 % |

## Approvals

### CE

| | |
|---|---|
| Certificate | CE-compliant |

### UKCA

| | |
|---|---|
| Certificate | UKCA-compliant |

### ATEX

| | |
|---|---|
| Identification | Ⓔx II 3 G Ex nA nC IIC T4 Gc X |

### UL, USA/Canada

| | |
|---|---|
| Identification | UL/C-UL Listed UL 508 |

### GL

| | |
|---|---|
| Identification | GL EMC 1 C |

## EMC data

| | |
|---|---|
| Electromagnetic compatibility | Conformance with EMC directive |
| Low Voltage Directive | Conformance with Low Voltage Directive |
| Noise immunity | EN 61000-6-2 |
| Note | When being exposed to interference, there may be minimal deviations. |

### Noise emission

| | |
|---|---|
| Standards/regulations | EN 61000-6-4 |

## Standards and regulations

| | |
|---|---|
| Standards/regulations | EN 50178 |

## Mounting

| | |
|---|---|
| Mounting type | DIN rail mounting |
| Assembly note | on standard DIN rail NS 35 in accordance with EN 60715 |
| Mounting position | any |

## Drawings

Block diagram

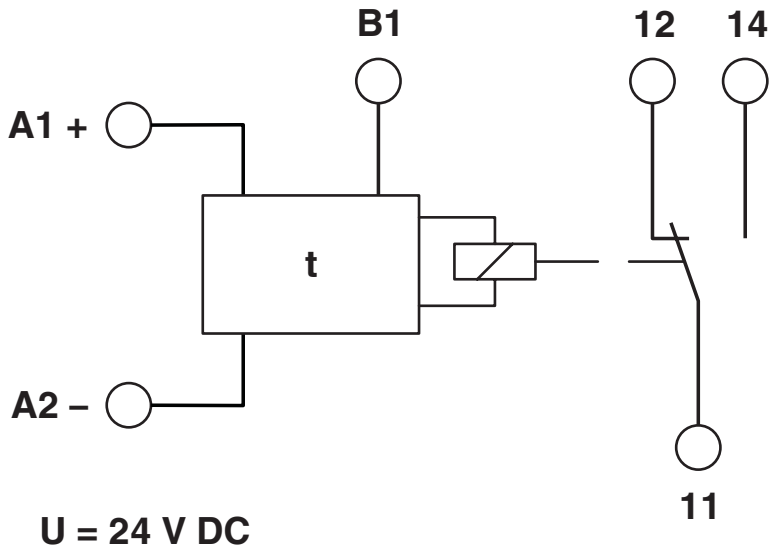

## Classifications

### UNSPSC

| | |
|---|---|
| UNSPSC 21.0 | 39122329 |

## Environmental product compliance

EU RoHS

| | |
|---|---|
| Fulfills EU RoHS substance requirements | Yes |
| Exemption | 7(a), 7(c)-I |

China RoHS

| | |
|---|---|
| Environment friendly use period (EFUP) | EFUP-50 |
| | An article-related China RoHS declaration table can be found in the download area for the respective article under "Manufacturer declaration". For all articles with EFUP-E, no China RoHS declaration table issued and required. |

EU REACH SVHC

| | |
|---|---|
| REACH candidate substance (CAS No.) | Lead(CAS: 7439-92-1) |

Phoenix Contact 2026 © - all rights reserved
https://www.phoenixcontact.com

PHOENIX CONTACT Ltd
Halesfield 13, Telford
Shropshire, TF7 4PG
01952 681700
info@phoenixcontact.co.uk