QUINT4-PS/24DC/12DC/8/PT - DC/DC converter

2910122

https://www.phoenixcontact.com/gb/products/2910122

Please be informed that the data shown in this PDF document is generated from our online catalog. Please find the complete data in the user documentation. Our general terms of use for downloads are valid.



Primary-switched DC/DC converter, QUINT POWER, DIN rail mounting, SFB Technology (Selective Fuse Breaking), input: 24 V DC, output: 12 V DC / 8 A

Product description

QUINT DC/DC converter with maximum functionality
DC/DC converters alter the voltage level, regenerate the voltage at the end of long cables or enable the creation of independent supply systems by means of electrical isolation.
QUINT DC/DC converters magnetically and therefore quickly trip circuit breakers with six times the nominal current, for selective and therefore cost-effective system protection. The high level of system availability is additionally ensured, thanks to preventive function monitoring, as it reports critical operating states before errors occur.

Your advantages

- Most powerful output side: easy system expansion, reliable heavy load startup and miniature circuit breaker tripping
- Most comprehensive signaling: preventive function monitoring reports critical operating states before errors occur
- Free selection between Push-in and screw connection

COMPLETE line

SFB Technology
Designed by Phoenix Contact

Push-in Technology
Designed by Phoenix Contact

C1
D2

H
D
W

Commercial data

Item number	2910122
Packing unit	1 pc
Minimum order quantity	1 pc
Sales key	CMDI43
Product key	CMDI43
GTIN	4055626537474
Weight per piece (including packing)	833 g
Weight per piece (excluding packing)	835 g
Customs tariff number	85044095
Country of origin	TH

Technical data

Input data

Nominal input voltage range	24 V DC
Input voltage range	24 V DC -25 % ... +40 %
Wide-range input	no
Electric strength, max.	35 V DC (60 s)
Inrush current	typ. 3 A
Inrush current integral (I^2t)	< 0.02 A^2s
Inrush current limitation	1 A
Mains buffering time	typ. 17 ms (24 V DC)
Current consumption	5.5 A (24 V DC)
Typical response time	300 ms (from SLEEP MODE)
Switch-on time	< 1 s
Input fuse	15 A (slow-blow, internal)
Recommended breaker for input protection	10 A ... 16 A (Characteristic B, C, D, K or comparable)

Output data

Efficiency	typ. 91 % (24 V DC)
Output characteristic	U/I Advanced
	Smart HICCUP
	FUSE MODE
Nominal output voltage	12 V DC
Setting range of the output voltage (U_{Set})	12 V DC ... 15 V DC (> 12 V DC, constant capacity)
Nominal output current (I_N)	8 A
Static Boost ($I_{Stat.Boost}$)	10 A
Dynamic Boost ($I_{Dyn.Boost}$)	16 A (5 s)
Selective Fuse Breaking (I_{SFB})	48 A (15 ms)
Magnetic circuit breaker tripping	A1 ... A6 / B2 ... B6 / Z1 ... Z6
Short-circuit-proof	yes
No-load proof	yes
Output power (P_N)	96 W
Output power ($P_{Stat. Boost}$)	120 W
Output power ($P_{Dyn. Boost}$)	192 W (5 s)
Feedback voltage resistance	≤ 25 V DC
Protection against overvoltage at the output (OVP)	≤ 18 V DC
Residual ripple	< 13 mV_{PP}
Control deviation static	< 1 % (change in load, static 10 % ... 90 %)
Control deviation dynamic	< 1 % (change in load, static 10 % ... 90 %)
Control deviation Input voltage change	< 1 % (change in load, static 10 % ... 90 %)
Rise time	< 100 ms (U_{OUT} (10 % ... 90 %))
Connection in series	yes
Maximum no-load power dissipation	< 2 W

Power loss nominal load max.	< 9 W
Power dissipation SLEEP MODE	< 1 W
Connection in parallel	yes, for redundancy and increased capacity
Fuse protection (secondary side)	electronic
	thermal-magnetic
	thermal

Connection data

Input

Position	1.x

Conductor connection

Connection method	Push-in connection
rigid	0.2 mm² ... 6 mm²
flexible	0.2 mm² ... 6 mm²
flexible with ferrule without plastic sleeve	0.2 mm² ... 4 mm²
flexible with ferrule with plastic sleeve	0.2 mm² ... 4 mm²
rigid (AWG)	24 ... 10
Stripping length	10 mm

Output

Position	2.x

Conductor connection

Connection method	Push-in connection
rigid	0.2 mm² ... 6 mm²
flexible	0.2 mm² ... 6 mm²
flexible with ferrule without plastic sleeve	0.2 mm² ... 4 mm²
flexible with ferrule with plastic sleeve	0.2 mm² ... 4 mm²
rigid (AWG)	24 ... 10
Stripping length	10 mm

Signal

Position	3.x

Conductor connection

Connection method	Push-in connection
rigid	0.2 mm² ... 1 mm²
flexible	0.2 mm² ... 1.5 mm²
flexible with ferrule without plastic sleeve	0.2 mm² ... 1.5 mm²
flexible with ferrule with plastic sleeve	0.2 mm² ... 0.75 mm²
rigid (AWG)	24 ... 16
Stripping length	8 mm

Signaling

LED signaling

Types of signaling	LED
	Floating signal contact
	Active signal output Out1 (digital, configurable)
	Active signal output Out2 (analog, configurable)
	Remote contact
	Signal ground SGnd
Signal threshold	> 100 % (LED lights up yellow, output power > 96 W)
	> 75 % (LED lights up green, output power > 72 W)
	> 50 % (LED lights up green, output power > 48 W)
	> 0.9 x U_{Set} (LED lights up green)
	< 0.9 x U_{Set} (LED flashes green)
	> 0.8 x U_{InNom} (LED off)
	< 0.8 x U_{InNom} (LED lights up yellow)

Signal input Remote (configurable)

Connection labeling	3.3 +
Function	Output power ON/OFF (remote)
Default	Output power ON (>40 kΩ/24 V DC/open bridge between REM and SGnd)

Signal output Out 1 (configurable)

Connection labeling	3.5 +
Digital	0 V DC
	24 V DC
	20 mA
Default	U_{IN} input voltage OK
Signal option	Output voltage
	Output current
	Output power
	Operating hours
	Early warning of high temperatures
	OVP voltage limitation active

Signal output Out 2 (configurable)

Connection labeling	3.6 +
Digital	0 V DC
	24 V DC
	20 mA
Default	Output power
Signal option	Output voltage
	Output current
	Operating hours
	Early warning of high temperatures
	OVP voltage limitation active

Analog	4 mA ... 20 mA ±5 % (Load ≤400 Ω)
Signal option	Output voltage
	Output current
	Output power

Signal output Relay 13/14 (configurable)

Connection labeling	3.1, 3.2
Switch contact (floating)	floating
Digital	24 V DC
	1 A
	30 V AC
	0.5 A
Default	Output voltage
Signal option	Output current
	Output power
	Operating hours
	Early warning of high temperatures
	OVP voltage limitation active
	U_{IN} input voltage OK

Signal ground SGnd

Connection labeling	3.4 +
Function	Signal ground
Reference potential	to OUT1, OUT2, REM

Electrical properties

Number of phases	1.00
Insulation voltage input/output	4 kV DC (type test)
	2 kV DC (routine test)
Switching frequency	190.00 kHz ... 220.00 kHz (Auxiliary converter stage)
	50.00 kHz ... 350.00 kHz (Main converter stage)

Product properties

Product family	QUINT POWER
MTBF (IEC 61709, SN 29500)	> (25 °C)
	> 970000 h (40 °C)
	> (60 °C)

Insulation characteristics

Protection class	Special with SELV input and output
Degree of pollution	2

Life expectancy (electrolytic capacitors)

Current	4 A
Temperature	40 °C
Time	452000 h

Additional text	12 V DC

Life expectancy (electrolytic capacitors)

Current	8 A
Temperature	40 °C
Time	211000 h
Additional text	12 V DC

Life expectancy (electrolytic capacitors)

Current	8 A
Temperature	30 °C
Time	422000 h
Additional text	12 V DC

Dimensions

Item dimensions

Width	36 mm
Height	130 mm
Depth	125 mm

Item dimensions with alternative mounting

Width	122 mm
Height	130 mm
Depth	39 mm

Installation dimensions

Installation distance right/left (active)	15 mm / 15 mm (≤ 70 °C)
Installation distance right/left (passive)	0 mm / 0 mm (≤ 70 °C)
Installation distance top/bottom (active)	50 mm / 50 mm (≤ 70 °C)
Installation distance top/bottom (passive)	50 mm / 50 mm (≤ 70 °C)

Mounting

Mounting type	DIN rail mounting
Assembly note	alignable: P_N ≥50%, 5 mm horizontally, 15 mm next to active components, 50 mm vertically alignable: P_N <50%, 0 mm horizontally, 40 mm vertically top, 20 mm vertically bottom
With protective coating	no

Material specifications

Flammability rating according to UL 94 (housing / terminal blocks)	V0
Housing material	Metal
Hood version	Stainless steel X6Cr17
Side element version	Aluminum

Environmental and real-life conditions

Ambient conditions

Degree of protection	IP20
Ambient temperature (operation)	-25 °C ... 70 °C (> 60 °C Derating: 2,5 %/K)
Ambient temperature (storage/transport)	-40 °C ... 85 °C
Ambient temperature (start-up type tested)	-40 °C
Maximum altitude	≤ 5000 m (> 2000 m, observe derating)
Climatic class	3K22 (in accordance with EN 60721-3-3)
Max. permissible relative humidity (operation)	≤ 95 % (at 25 °C, non-condensing)
Shock	18 ms, 30g, in each space direction (according to IEC 60068-2-27)
Vibration (operation)	5 Hz ... 100 Hz resonance search 2.3g, 90 min., resonance frequency 2.3g, 90 min. (according to DNV GL Class C)
Temp code	T4 (-25 ... +70 °C; > 60 °C, Derating: 2,5 %/K)

Standards and regulations

Overvoltage category

EN 61010-1	II (≤ 5000 m)
EN 62477-1	III (≤ 5000 m)

Safety for measurement, control, and laboratory equipment

Standard designation	Electrical safety (of control and regulation devices)
Standards/specifications	IEC 61010-1

Protective extra-low voltage

Standard designation	Protective extra-low voltage
Standards/specifications	EN 61010-1 (SELV)
	IEC 61010-2-201 (PELV)

Mains voltage dips

Standard designation	Mains variation/undervoltage
Standards/specifications	EN 61000-4-29

Railway applications

Standard designation	Railway applications
Standards/specifications	EN 50121-3-2
	IEC 62236-3-2

Approvals

UL

Identification	UL Listed UL 61010-1

UL

Identification	UL Listed UL 61010-2-201

UL

Identification	UL 121201 & CSA C22.2 No. 213-17 Class I, Division 2, Groups A, B, C, D T4 (Hazardous Location)

CSA

Identification	CAN/CSA-C22.2 No. 61010-1-12

CSA

Identification	CAN/CSA C22.2 No. 61010-2-201:18

SIQ

Identification	Type tested (type approved)

SIQ

Identification	CB scheme (IEC 61010-1, IEC 61010-2-201)

Shipbuilding

Identification	DNV

Shipbuilding

Identification	ABS

Shipbuilding

Identification	BV

Shipbuilding

Identification	NK

Shipbuilding

Identification	LR

EMC data

Electromagnetic compatibility	Conformance with EMC Directive 2014/30/EU
Low Voltage Directive	Conformance with Low Voltage Directive 2014/35/EC
EMC requirements for noise emission	EN 61000-6-3
	EN 61000-6-4
EMC requirements for noise immunity	EN 61000-6-1
	EN 61000-6-2
EMC requirements, power plant	IEC 61850-3
	EN 61000-6-5

Conducted noise emission

Standards/regulations	EN 55016
	EN 61000-6-3 (Class B)

Noise emission

Standards/regulations	Additional basic standard EN 61000-6-5 (immunity in switching devices), IEC/EN 61850-3 (power supply)

Noise emission

Standards/regulations	EN 55016

	EN 61000-6-3 (Class B)

DNV GL conducted noise emissions

DNV	Class B
Additional text	Bridge and deck area

DNV GL noise radiation

DNV	Class B
Additional text	Bridge and deck area

Electrostatic discharge

Standards/regulations	EN 61000-4-2

Electrostatic discharge

Contact discharge	8 kV (Test Level 4)
Discharge in air	15 kV (Test Level 4)
Comments	Criterion A

Electromagnetic HF field

Standards/regulations	EN 61000-4-3

Electromagnetic HF field

Frequency range	80 MHz ... 1 GHz
Test field strength	20 V/m (Test Level 3)
Frequency range	1 GHz ... 6 GHz
Test field strength	10 V/m (Test Level 3)
Comments	Criterion A

Fast transients (burst)

Standards/regulations	EN 61000-4-4

Fast transients (burst)

Input	2 kV (Test Level 3 - asymmetrical)
Output	2 kV (Test Level 3 - asymmetrical)
Signal	2 kV (Test Level 4 - asymmetrical)
Comments	Criterion A

Surge voltage load (surge)

Standards/regulations	EN 61000-4-5

Surge voltage load (surge)

Input	1 kV (Test Level 3 - symmetrical)
	2 kV (Test Level 3 - asymmetrical)
Output	1 kV (Test Level 3 - symmetrical)
	2 kV (Test Level 3 - asymmetrical)
Signal	2 kV (Test Level 3 - asymmetrical)
Comments	Criterion A

Conducted interference

Standards/regulations	EN 61000-4-6

Conducted interference

Input/output/signal	asymmetrical
Frequency range	0.15 MHz ... 80 MHz
Comments	Criterion A
Voltage	10 V (Test Level 3)

Power frequency magnetic field

Standards/regulations	EN 61000-4-8
Frequency	16.7 Hz
	50 Hz
	60 Hz
Test field strength	100 A/m
Additional text	60 s
Comments	Criterion A
Frequency	50 Hz
	60 Hz
Frequency range	50 Hz ... 60 Hz
Test field strength	1 kA/m
Additional text	3 s
Comments	Criterion A
Frequency	0 Hz
Test field strength	300 A/m
Additional text	DC, 60 s
Comments	Criterion A

Voltage dips

Standards/regulations	EN 61000-4-29
Voltage	24 V DC
Voltage dip	70 %
Time	100 ms
Additional text	Test Level 2
Comments	Criterion A
Voltage dip	40 %
Time	100 ms
Additional text	Test Level 2
Comments	Criterion A
Voltage dip	0 %
Time	50 ms
Additional text	Test Level 2
Comments	Criterion B

Pulse-shape magnetic field

Standards/regulations	EN 61000-4-9
Test field strength	1000 A/m

Comments	Criterion A

Asymmetrical conducted disturbance variables

Standards/regulations	EN 61000-4-16
Test level 1	15 Hz 150 Hz (Test Level 3)
Voltage	10 V 1 V
Test level 2	150 Hz 1.5 kHz (Test Level 3)
Voltage	1 V
Test level 3	1.5 kHz 15 kHz (Test Level 3)
Voltage	1 V 10 V
Test level 4	15 kHz 150 kHz (Test Level 3)
Voltage	10 V
Test level 5	16.7 Hz 50 Hz 60 Hz 150 Hz 180 Hz (Test Level 3)
Voltage	10 V (Permanent)
Test level 6	0 Hz 16.7 Hz 50 Hz 60 Hz (Test Level 3)
Voltage	100 V (1 s)
Comments	Criterion A

Alternating component of direct voltage

Standards/regulations	EN 61000-4-17
Alternating component	15 % (U_N)
Frequency	50 Hz
	100 Hz
	150 Hz
Comments	Criterion A
Alternating component	14 % (U_N)
Frequency	300 Hz
Comments	Criterion A

Attenuated oscillating wave

Standards/regulations	EN 61000-4-18
Input, output (test level 1)	100 kHz 1 MHz (Test Level 3 - symmetrical)
Voltage	1 kV
Input, output (test level 2)	100 kHz 1 MHz (Test Level 2 - asymmetrical)
Voltage	1 kV
Input, output (test level 3)	10 MHz (Test Level 2 - asymmetrical)
Voltage	0.5 kV
Signals (test level 1)	100 kHz 1 MHz (Test Level 2 - symmetrical)
Voltage	0.5 kV
Signals (test level 2)	100 kHz 1 MHz (Test Level 2 - asymmetrical)
Voltage	1 kV
Comments	Criterion A

Attenuated oscillating magnetic field

Standards/regulations	EN 61000-4-10
Test field strength	100 A/m

Test level 1	100 kHz
Test field strength	100 A/m
Test level 2	1 MHz
Comments	Criterion A

Criteria

Criterion A	Normal operating behavior within the specified limits.
Criterion B	Temporary impairment to operational behavior that is corrected by the device itself.
Criterion C	Temporary adverse effects on the operating behavior, which the device corrects automatically or which can be restored by actuating the operating elements.

Drawings

Schematic diagram

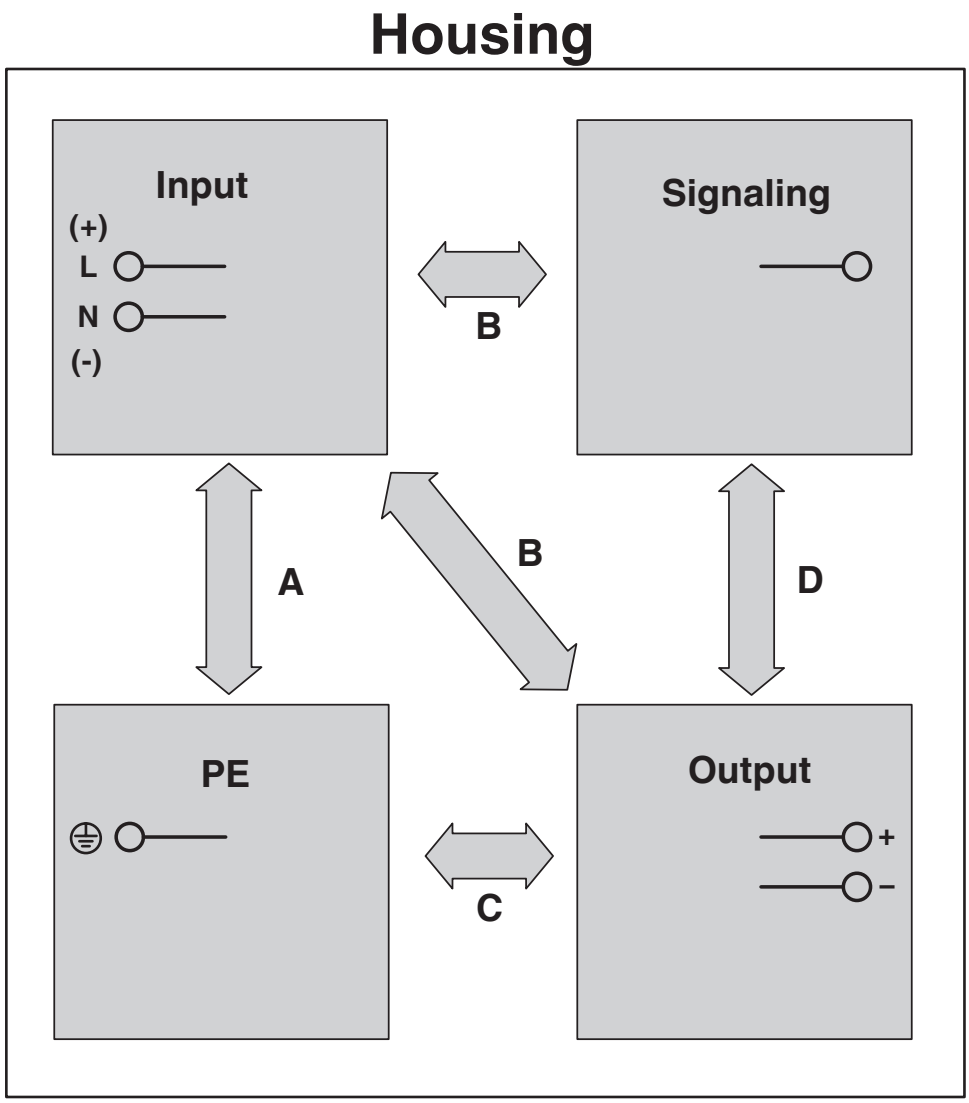

Diagram

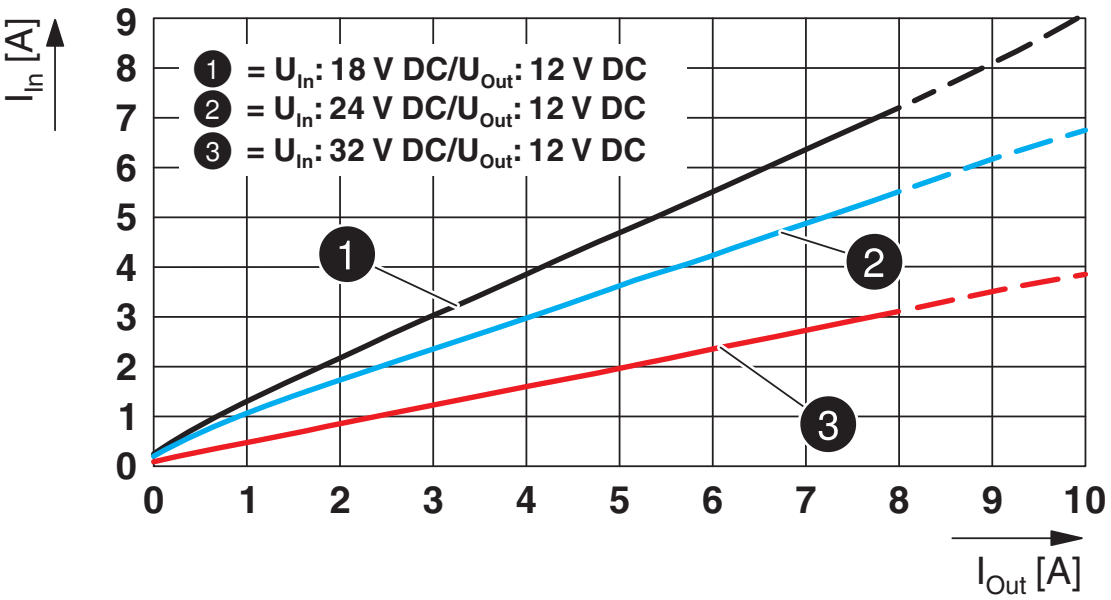

Diagram

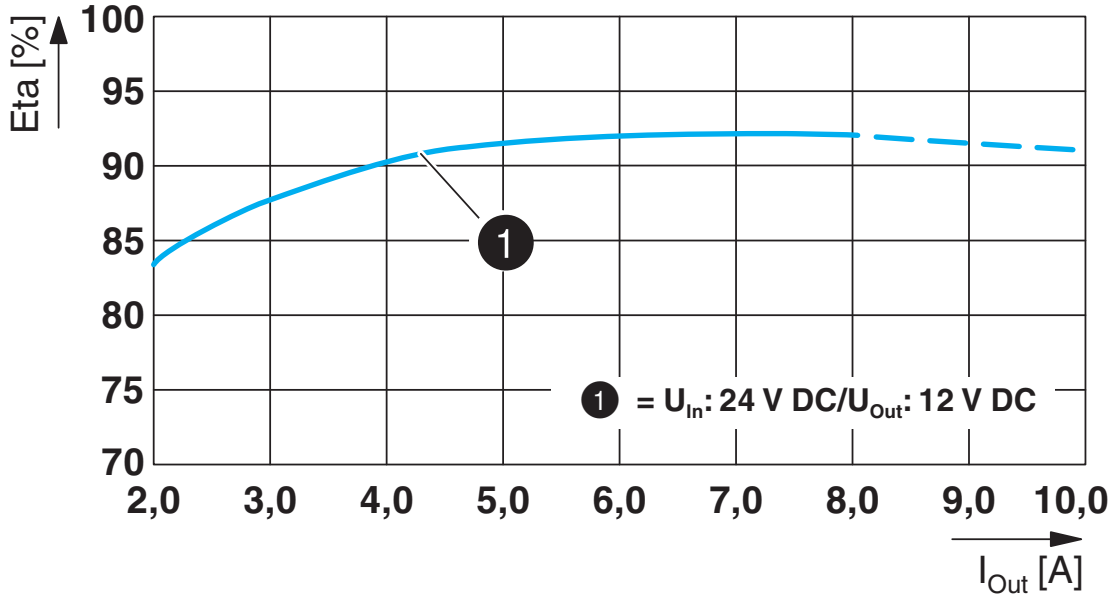

Block diagram

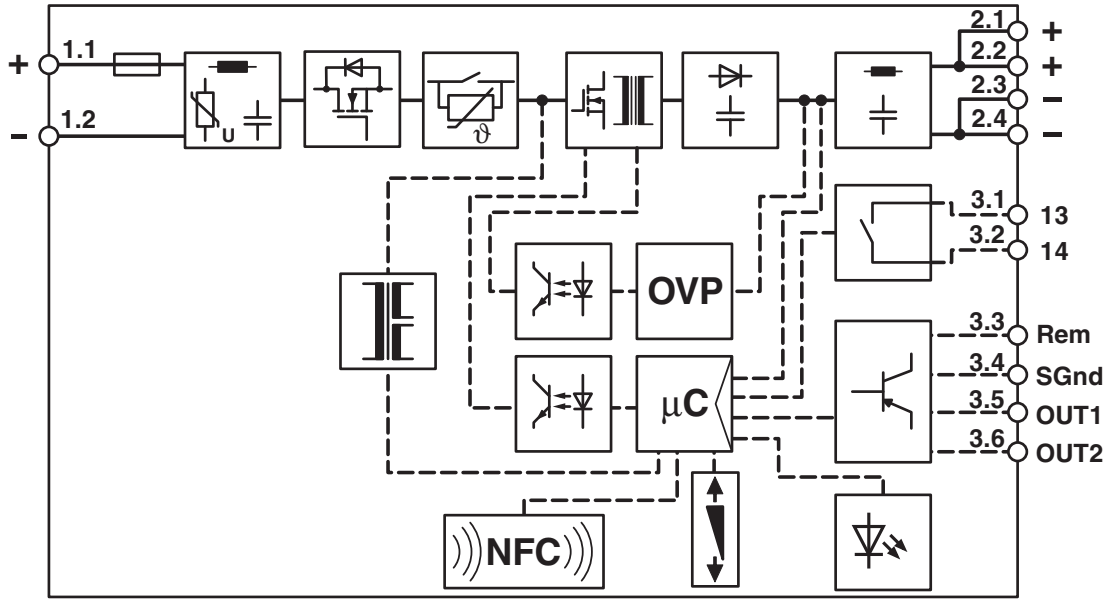

Approvals

To download certificates, visit the product detail page: https://www.phoenixcontact.com/gb/products/2910122

LR
Approval ID: LR22472797TA

NK
Approval ID: TA21182M

BV
Approval ID: 57060/B0 BV

UL Listed
Approval ID: E123528

cUL Listed
Approval ID: E123528

ABS
Approval ID: 21-2073195-PDA

Type approved
Approval ID: SI-SIQ BG 005/059

DNV
Approval ID: TAA00000BV

Classifications

ECLASS

ECLASS-13.0	27040701
ECLASS-15.0	27040701

ETIM

ETIM 10.0	EC002540

UNSPSC

UNSPSC 21.0	39121000

Environmental product compliance

EU RoHS

Fulfills EU RoHS substance requirements	Yes
Exemption	7(a), 7(c)-I

China RoHS

Environment friendly use period (EFUP)	EFUP-25
	An article-related China RoHS declaration table can be found in the download area for the respective article under "Manufacturer declaration". For all articles with EFUP-E, no China RoHS declaration table issued and required.

EU REACH SVHC

REACH candidate substance (CAS No.)	Lead(CAS: 7439-92-1)
SCIP	9c1e6ba7-b194-4027-bba3-8b87b941211f

EF3.1 Climate Change

CO2e kg	16.193 kg CO2e

Phoenix Contact 2026 © - all rights reserved
https://www.phoenixcontact.com

PHOENIX CONTACT Ltd
Halesfield 13, Telford
Shropshire, TF7 4PG
01952 681700
info@phoenixcontact.co.uk