ELR H5-IS-PT- 24DC/500AC-9-P - Hybrid motor starter

2909567

https://www.phoenixcontact.com/gb/products/2909567

Please be informed that the data shown in this PDF document is generated from our online catalog. Please find the complete data in the user documentation. Our general terms of use for downloads are valid.



Hybrid motor starter as an alternative to a conventional reversing contactor. Reverses 3~ AC motors up to 9 A, provides motor protection and emergency stop up to SIL 3/PL e. Group shut-down, supply, and relay extension possible via DIN rail connector.

Product description

The modular 3-phase hybrid motor starter with reversing function and current monitoring provides the following functions: - Forward running - Reverse running - Motor overload protection - Emergency stop to performance level PLe (TÜV certified) Additional advantages are provided by using the DIN rail connector adapter (Item No. 2203861): - Emergency stop of the enable signal is also possible via the DIN rail connector, e.g. via a safety relay (PSR DC38...) - Power can also be supplied via the DIN rail connector by a system power supply (e. g., QUINT4-SYS...) or via the PCB connector IMC 1,5/ 5-ST-3,81, Item No. 1857919 - Optional relay module (e. g., EM-2RSC/21AU-R/L-P, Item No. 2908701) provides additional status information Thanks to the internal interlocking circuit and load wiring, wiring expense is reduced to a minimum.

Commercial data

Item number	2909567
Packing unit	1 pc
Minimum order quantity	1 pc
Sales key	DK7474
Product key	DK7474
GTIN	4055626425498
Weight per piece (including packing)	256.62 g
Weight per piece (excluding packing)	233.11 g
Customs tariff number	85371098
Country of origin	DE

Technical data

Product properties

Product type	Hybrid motor starters
Product family	CONTACTRON
Operating mode	100% operating factor

Electrical properties

Number of phases	3
Motor starter type	Reversing starter
Switching frequency	≤ 2 Hz (Load-dependent)
Switching frequency	≤ 2 Hz (Load-dependent)
Maximum power dissipation	7 W
Minimum power dissipation	0.88 W
Coordination type	1

Supply

Rated control circuit supply voltage U_S	24 V DC
Control supply voltage range	19.2 V DC ... 30 V DC
Rated control supply current I_S	60 mA
Protective circuit	Surge protection
	Reverse polarity protection; Parallel polarity protection diode

Insulation characteristics

Rated insulation voltage	550 V
Rated surge voltage	6 kV
Overvoltage category	III
Degree of pollution	2
Insulation characteristics between the control input and control supply voltage, and auxiliary circuit to the main circuit	Safe isolation (IEC 60947-1)
Isolation characteristics between the control input and control supply voltage to auxiliary circuit	Safe isolation (IEC 60947-1) in the auxiliary circuit ≤ 300 V AC

Emergency tripping

Operate threshold	> 60 A
Response time	< 0.5 s

Input data

Control

Input name	Control input: right/left and enable input
Note	The enable input is compatible with signals with blanking (semiconductor output signals with test pulse with max. 3 ms duration), unblanking pulses of max. 4 ms are tolerated without adversely affecting the safety function.
Rated actuating voltage U_C	24 V DC

Triggering voltage range	19.2 V DC ... 30 V DC
Rated actuating current I_C	7 mA
Switching threshold	9.6 V (“0” signal)
	19.2 V (“1” signal)
Switching level	< 5 V DC (For EMERGENCY STOP)
Typical turn-off time	< 30 ms
Protective circuit	Reverse polarity protection

Output data

AC output

Rated operating voltage U_e	500 V AC
Operating voltage range	42 V AC ... 550 V AC
Rated operating current I_e	9 A
	7 A
Mains frequency	50/60 Hz
Load current range	1.5 A ... 9 A
Trigger characteristic in acc. with IEC 60947-4-2	Class 10 (≤ 3 A)
	Class 10A (> 3 A)
Cooling time	20 min (for auto reset)
Leakage current	0 mA
Protective circuit	Surge protection; Varistor

Acknowledge output

Note	Confirmation: floating change-over contact, signal contact
Contact switching type	1 changeover contact
Switching capacity in accordance with IEC 60947-5-1	2 A (24 V, DC13)

Connection data

Control circuits

Connection method	Push-in connection
Stripping length	10 mm
Conductor cross-section rigid	0.2 mm² ... 2.5 mm²
Conductor cross-section flexible	0.2 mm² ... 2.5 mm²
Conductor cross-section AWG	24 ... 14

Load circuit

Connection method	Push-in connection
Stripping length	10 mm
Conductor cross-section rigid	0.2 mm² ... 2.5 mm²
Conductor cross-section flexible	0.2 mm² ... 2.5 mm²
Conductor cross-section AWG	24 ... 14

Signaling

Status display	Yellow LED

Operating voltage display	Green LED
Error indication	Red LED

Dimensions

Width	22.5 mm
Height	107.5 mm
Depth	114 mm

Material specifications

Flammability rating according to UL 94 (Housing)	V0 (Housing)

Environmental and real-life conditions

Ambient conditions

Degree of protection	IP20
Ambient temperature (operation)	-25 °C ... 70 °C (observe derating)
Ambient temperature (storage/transport)	-40 °C ... 80 °C
Altitude	≤ 2000 m

Approvals

UL approval

Certificate	NLDX.E228652
	NRNT.E172140

Safety Integrity Level (SIL, IEC 61508)

Identification	≤ 3
Note	Safe shutdown

Safety Integrity Level (SIL, IEC 61508)

Identification	2
Note	Motor protection

Performance Level (ISO 13849)

Identification	≤ e
Note	Safe shutdown

Category (ISO 13849)

Identification	≤ 3
Note	Safe shutdown

CCC

Identification	GB/T 14048.6-2016
Certificate	2024010304672814

UL data

SCCR	100 kA (480 V AC (fuse: 30 A class CC/30 A class J (high fault)))
	5 kA (480 V AC (fuse: 20 A RK5 (standard fault)))

FLA	7.6 A (480 V AC)
Group installation	20 A (class RK5, SCCR 5kA (480 V AC), #24 - 14 AWG max. solid and stranded)
	30 A (class CC or J, SCCR 100kA (480 V AC), #24 - 14 AWG max, solid and stranded)
Category code	NLDX / NRNT
Horsepower ratings	2 hp (208 V AC)
	2 hp (230 V AC)
	2 hp (240 V AC)
	5 hp (480 V AC)
Ambient temperature (operation)	-25 °C ... 55 °C

Standards and regulations

Standards/regulations

Standards/regulations	EN 60947-1
	EN 60947-4-2
	EN ISO 13849
	IEC 62061
	IEC 61508

Mounting

Mounting type	DIN rail mounting
Assembly note	alignable, for spacing see derating
Mounting position	vertical (horizontal DIN rail, motor output below)

Drawings

Block diagram

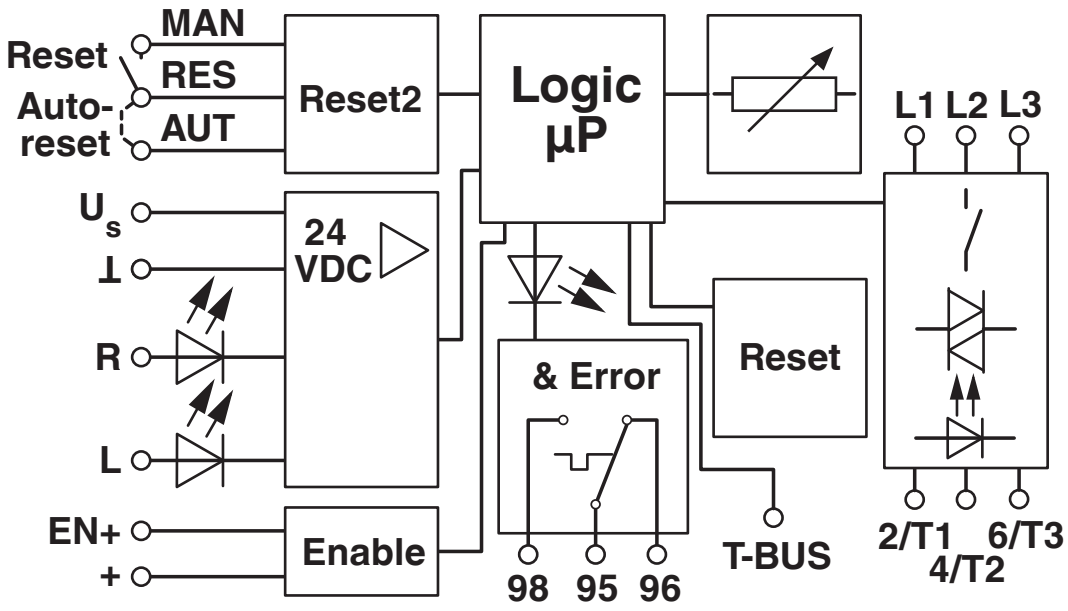

Approvals

To download certificates, visit the product detail page: https://www.phoenixcontact.com/gb/products/2909567

IECEE CB Scheme
Approval ID: CB-DE1-60807-A1

UL Listed
Approval ID: FILE E 172140

cUL Listed
Approval ID: FILE E 172140

cUL Listed
Approval ID: E228652

UL Listed
Approval ID: E228652

VDE Zeichengenehmigung
Approval ID: 40054426

Functional Safety
Approval ID: 968/FSP 1746.04/23

CCC
Approval ID: 2024010304672814

DNV
Approval ID: TAA00002HK

Classifications

ECLASS

ECLASS-13.0	27370905
ECLASS-15.0 ASSET	27250101
ECLASS-15.0	27370905

ETIM

ETIM 10.0	EC001037

UNSPSC

UNSPSC 21.0	25173900

Environmental product compliance

EU RoHS

Fulfills EU RoHS substance requirements	Yes
Exemption	7(a), 7(a)-I, 7(a)-III, 7(c)-I

China RoHS

Environment friendly use period (EFUP)	EFUP-50
	An article-related China RoHS declaration table can be found in the download area for the respective article under "Manufacturer declaration". For all articles with EFUP-E, no China RoHS declaration table issued and required.

EU REACH SVHC

REACH candidate substance (CAS No.)	Lead(CAS: 7439-92-1)
SCIP	082eb457-f6b6-472c-a341-b6c1ca74ef2b

Phoenix Contact 2026 © - all rights reserved
https://www.phoenixcontact.com

PHOENIX CONTACT Ltd
Halesfield 13, Telford
Shropshire, TF7 4PG
01952 681700
info@phoenixcontact.co.uk