# CBMC E4 24DC/1-4A NO-C - Electronic circuit breaker

2908713

https://www.phoenixcontact.com/gb/products/2908713

Please be informed that the data shown in this PDF document is generated from our online catalog. Please find the complete data in the user documentation. Our general terms of use for downloads are valid.



Multi-channel electronic circuit breaker that can be preconfigured, for protecting four loads at 24 V DC in the event of overload and short circuit. With electronic locking of the set nominal currents. For installation on DIN rails.

## Your advantages

- Easy device replacement without replanning, thanks to compact design and options for individual adjustments
- Circuits can be adjusted without any tools by means of one single pushable LED button
- Pre-configuration available – for device protection that meets the specific requirements of your system
- Optimum protection for cables and sensors as well as NEC Class 2 circuits by means of an additional internal output fuse
- Reliable protection against unintentional adjustment of current values, thanks to electronic locking
- Status LEDs in traffic light colors enable instantaneous determination of operating states

ELEKTROGERÄTE RÜCKNAHME

## Commercial data

| | |
|---|---|
| Item number | 2908713 |
| Packing unit | 1 pc |
| Minimum order quantity | 1 pc |
| Note | Made to order (non-returnable) |
| Sales key | CLA152 |
| Product key | CLA152 |
| Weight per piece (including packing) | 133.7 g |
| Weight per piece (excluding packing) | 119.5 g |
| Customs tariff number | 85362010 |
| Country of origin | DE |

# Technical data

## Notes

### General

| | |
|---|---|
| Note | Repeated hard short circuits can reduce the melting integral of the integrated backup fuse. |
| | Always connect the negative pole to terminal IN- to ensure the internal power supply. Return currents from the loads must not be fed back to the power supply via IN- of the circuit breaker. |

## Product properties

| | |
|---|---|
| Product type | Device circuit breakers |
| Product family | CBMC |
| Type | DIN rail module, one-piece |
| Number of positions | 1 |
| No. of channels | 4 |

### Insulation characteristics

| | |
|---|---|
| Protection class | III |
| Pollution degree | 2 |

## Electrical properties

### General

| | |
|---|---|
| Operating voltage | 18 V DC ... 30 V DC |
| Rated voltage | 24 V DC |
| Rated current $I_N$ | max. 16 A (IN+) |
| | max. 40 A (per terminal position when bridging additional devices via IN+) |
| Rated current $I_N$ | 1 / 2 / 3 / 4 A DC (adjustable or fixed per output channel) |
| Rated surge voltage | 0.5 kV |
| Tripping method | E (electronic) |
| Feedback resistance | max. 35 V DC |
| Required backup fuse | Only required if $I_{max}$ of the power supply > the short-circuit switching capacity. Integrated failsafe element. |
| Short-circuit switching capacity | 300 A |
| Dielectric strength | max. 35 V DC (Load circuit) |
| Fuse | electronic |
| Efficiency | > 99 % |
| Closed circuit current $I_0$ | typ. 25 mA |
| Power dissipation | typ. 0.6 W (No-load operation) |
| | < 4 W (Nominal operation) |
| Module initialization time | 1.6 s |
| Waiting time after switch off of a channel | 5 s (at overload / short circuit) |
| Measuring tolerance I | ± 15 % |

| | |
|---|---|
| MTBF (IEC 61709, SN 29500) | 11764705 h (at 25 °C with 21 % load) |
| | 5319148 h (at 40°C with 34.25% load) |
| | 846023 h (at 60°C with 100% load) |
| Fail-safe element | 4 A DC (per output channel) |
| Contact switching type | without electrical isolation |

Load circuit

| | |
|---|---|
| Shutdown time | ≤ 10 ms (for short circuit > 2.0 x $I_N$) |
| | 1 s (1.2 ... 2.0 x $I_N$) |
| Undervoltage switch-off | ≤ 17.8 V DC (active) |
| | ≥ 18.8 V DC (inactive) |
| Overvoltage switch-off | ≥ 30.5 V DC (active) |
| | ≤ 29.5 V DC (inactive) |
| Max. capacitive load | 30000 µF (Depending on the current setting and the short-circuit current available) |
| Switch-on delay | 0.1 s (per output channel) |

Indicator/remote signaling

| | |
|---|---|
| Connection name | Remote indication circuit |
| Switching function | N/O contact |
| Operating voltage | 0 V DC ... 30 V DC |
| Operating current | 100 mA DC |

## Connection data

Main circuit IN+

| | |
|---|---|
| Connection method | Push-in connection |
| Stripping length | 15 mm |
| Conductor cross-section flexible | 0.2 mm² ... 6 mm² |
| Conductor cross-section rigid | 0.2 mm² ... 10 mm² |
| Conductor cross-section AWG | 24 ... 8 |
| Conductor cross-section, flexible, with ferrule, with plastic sleeve | 0.25 mm² ... 4 mm² |
| Conductor cross-section, flexible, with ferrule, without plastic sleeve | 0.25 mm² ... 6 mm² |

Main circuit IN-

| | |
|---|---|
| Connection method | Push-in connection |
| Stripping length | 10 mm |
| Conductor cross-section rigid | 0.2 mm² ... 2.5 mm² |
| Conductor cross-section AWG | 24 ... 12 |
| Conductor cross-section, flexible, with ferrule, with plastic sleeve | 0.25 mm² ... 1.5 mm² |
| Conductor cross-section, flexible, with ferrule, without plastic sleeve | 0.25 mm² ... 2.5 mm² |

Main circuit OUT

| | |
|---|---|
| Connection method | Push-in connection |
| Stripping length | 10 mm |

| | |
|---|---|
| Conductor cross-section rigid | 0.2 mm² ... 2.5 mm² |
| Conductor cross-section AWG | 24 ... 12 |
| Conductor cross-section, flexible, with ferrule, with plastic sleeve | 0.25 mm² ... 1.5 mm² |
| Conductor cross-section, flexible, with ferrule, without plastic sleeve | 0.25 mm² ... 2.5 mm² |

Remote indication circuit

| | |
|---|---|
| Stripping length | 10 mm |
| Conductor cross-section rigid | 0.2 mm² ... 2.5 mm² |
| Conductor cross-section AWG | 24 ... 12 |
| Conductor cross-section, flexible, with ferrule, with plastic sleeve | 0.25 mm² ... 1.5 mm² |
| Conductor cross-section, flexible, with ferrule, without plastic sleeve | 0.25 mm² ... 2.5 mm² |

## Signaling

| | |
|---|---|
| Channel LED off | off (Channel switched off) |
| Channel LED yellow | lit (Channel switched on, channel load > 80% ) |
| | flashing (Programming mode active) |
| Channel LED green | lit (Channel switched on) |
| Channel LED red | lit (Channel switched off, over- or undervoltage active) |
| | ON temporarily (Channel switched off, 5 s cool-down phase, overload or short-circuit release) |
| | flashing (Channel switched off, ready to be switched back on, overload or short-circuit release) |
| | two flashes (Channel switched off, device total current limit 40 A exceeded) |

## Dimensions

| | |
|---|---|
| Dimensional drawing | 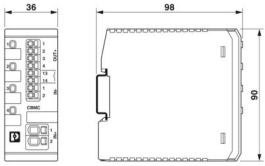  |
| Width | 36 mm |
| Height | 90 mm |
| Depth | 98 mm (incl. DIN rail 7.5 mm) |

## Material specifications

| | |
|---|---|
| Material | PC |
| | PA 6.6 |
| | PA 6.3T |
| | POM |
| Flammability rating according to UL 94 | V-0 |

## Environmental and real-life conditions

Ambient conditions

| | |
|---|---|
| Degree of protection | IP20 |
| Ambient temperature (operation) | -25 °C ... 60 °C |
| Ambient temperature (storage/transport) | -40 °C ... 70 °C |
| Altitude | ≤ 3000 m up to 52 °C (amsl) |
| | ≤ 4000 m up to 46 °C (amsl) |
| Humidity test | 96 h, 95 % RH, 40 °C |
| Shock (operation) | 30g (IEC 60068-2-27, Test Ea) |
| Vibration (operation) | 10 Hz ... 57.6 Hz (Amplitude ±0.35 mm; in accordance with IEC 60068-2-6, Test Fc) |
| | 57.6 Hz ... 150 Hz (Acceleration 5g; in accordance with IEC 60068-2-6, Test Fc) |

## Approvals

UL approval

| | |
|---|---|
| Identification | UL/C-UL Listed UL 508 |
| | UL Recognized UL 2367 |
| | NEC Class 2 according to UL 1310 |

Corrosive gas test

| | |
|---|---|
| Identification | ISA S71.04.2013 G3 Harsh Group A |

## Standards and regulations

| | |
|---|---|
| Standards/specifications | EN 61000-6-2 |
| Note | EMC – Immunity for industrial areas |
| Standards/specifications | EN 61000-6-3 |
| Note | EMC – Emission for residential, business and commercial properties and small operations |
| Standards/specifications | EN 60068-2-6 |
| Note | Environmental influences – Vibrations (sinusoidal) |
| Standards/specifications | EN 60068-2-27 |
| Note | Environmental influences – Shocks |
| Standards/specifications | EN 60068-2-78 |
| Note | Environmental influences – Moisture and heat, constant |
| Standards/specifications | EN 50178 |
| Note | Equipping power installations with electronic equipment |

## Mounting

| | |
|---|---|
| Mounting type | DIN rail: 35 mm |

## Drawings

Dimensional drawing

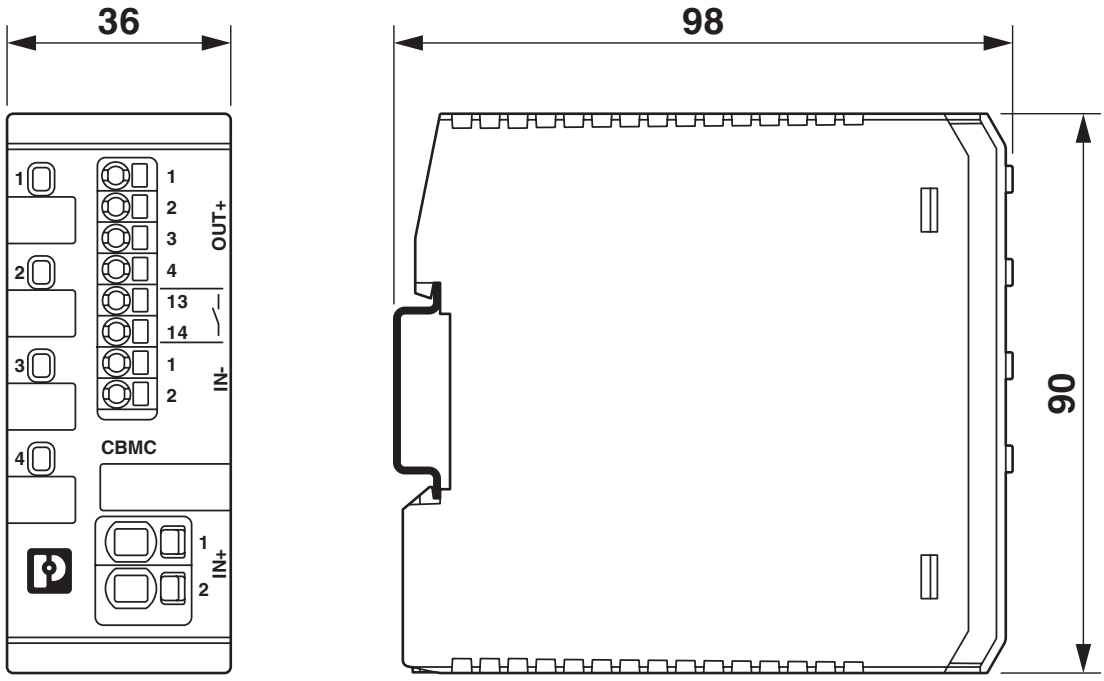

Product drawing

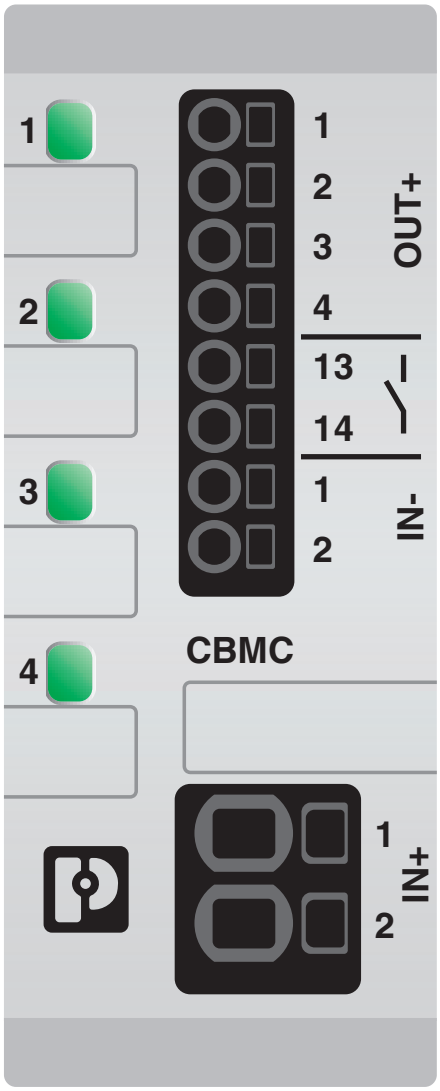


Application drawing

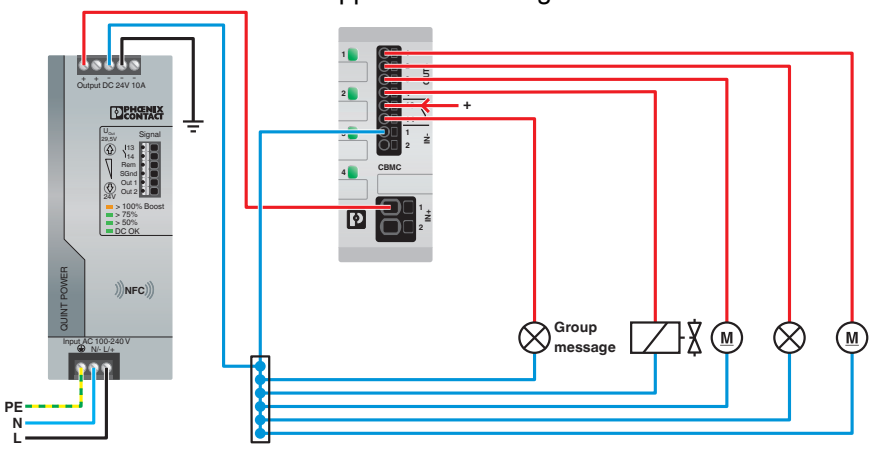

Application drawing

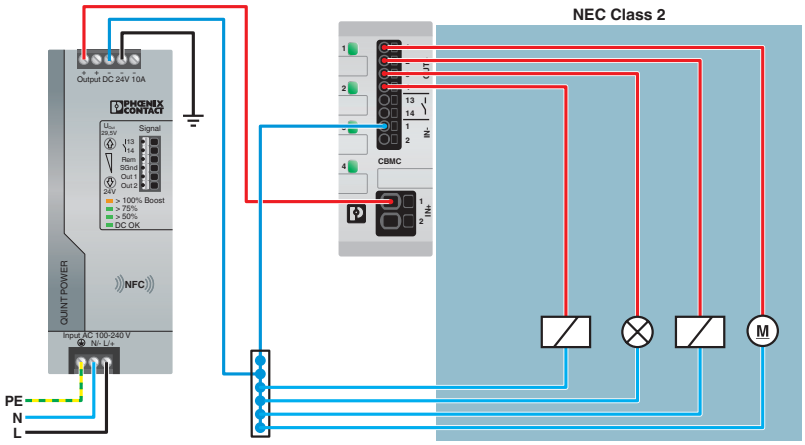


Diagram

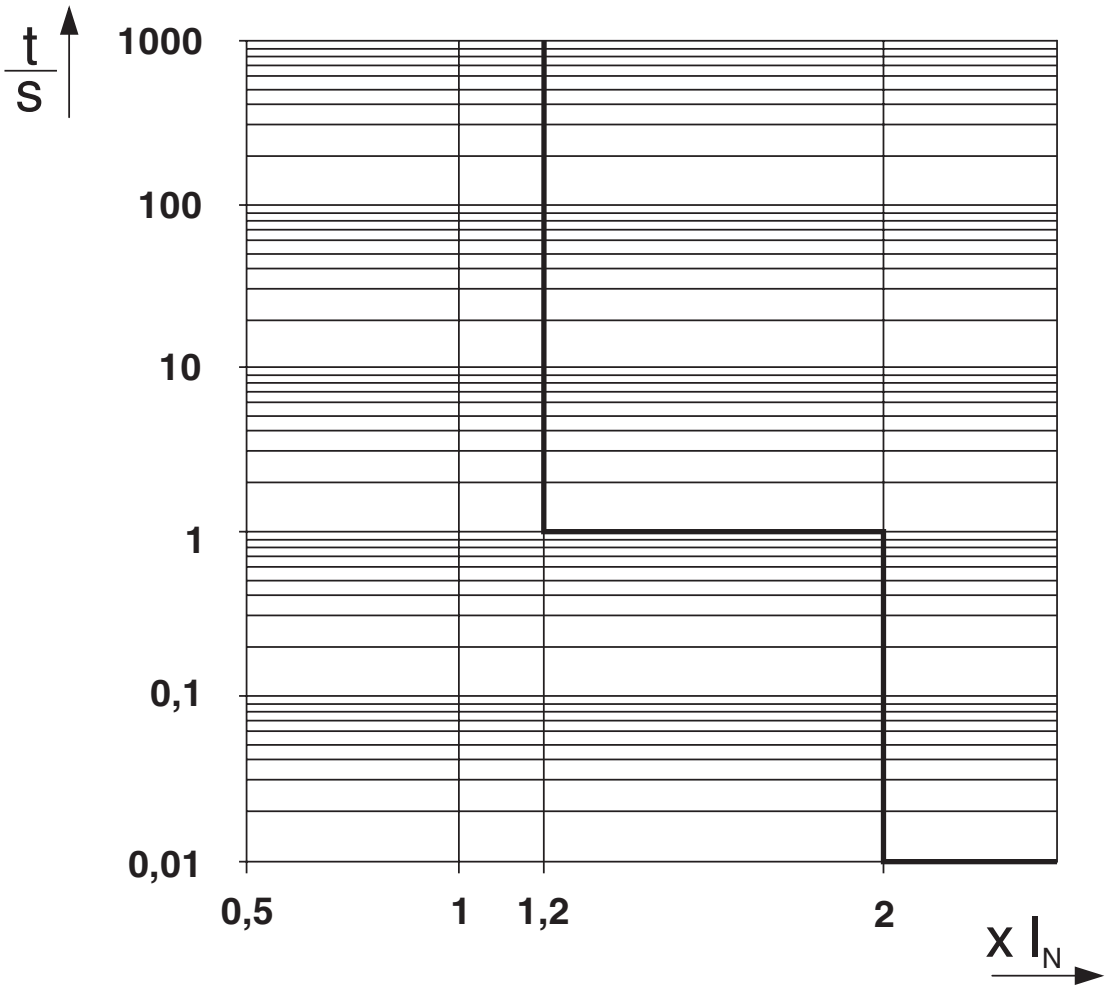


Trigger characteristic in the DC range

Block diagram

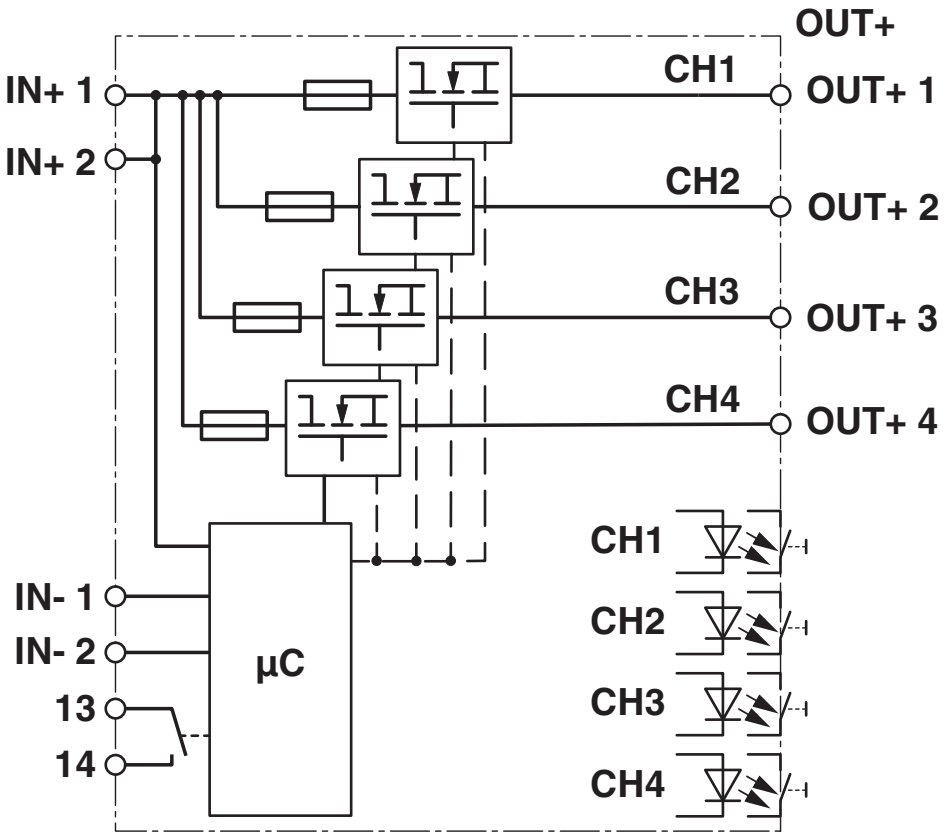

## Approvals

To download certificates, visit the product detail page: https://www.phoenixcontact.com/gb/products/2908713

**UL Recognized**
Approval ID: FILE E 317172

**UL Recognized**
Approval ID: E317172-20150319

**UL Listed**
Approval ID: E123528

**cUL Listed**
Approval ID: E123528

## Classifications

### ECLASS

| | |
|---|---|
| ECLASS-13.0 | 27140401 |
| ECLASS-15.0 | 27140401 |

### ETIM

| | |
|---|---|
| ETIM 10.0 | EC003538 |

### UNSPSC

| | |
|---|---|
| UNSPSC 21.0 | 39121400 |

## Environmental product compliance

EU RoHS

| | |
|---|---|
| Fulfills EU RoHS substance requirements | Yes |
| Exemption | 7(a), 7(c)-I |

China RoHS

| | |
|---|---|
| Environment friendly use period (EFUP) | EFUP-50 |
| | An article-related China RoHS declaration table can be found in the download area for the respective article under "Manufacturer declaration". For all articles with EFUP-E, no China RoHS declaration table issued and required. |

EU REACH SVHC

| | |
|---|---|
| REACH candidate substance (CAS No.) | Lead(CAS: 7439-92-1) |
| | Perfluorobutane sulfonic acid (PFBS) and its salts(CAS: n/a) |


Phoenix Contact 2026 © - all rights reserved
https://www.phoenixcontact.com



PHOENIX CONTACT Ltd
Halesfield 13, Telford
Shropshire, TF7 4PG
01952 681700
info@phoenixcontact.co.uk