ELR H3-IES-PT/500AC-9-IOL - Hybrid motor starter

2908672

https://www.phoenixcontact.com/gb/products/2908672

Please be informed that the data shown in this PDF document is generated from our online catalog. Please find the complete data in the user documentation. Our general terms of use for downloads are valid.

CRA-READY



Networkable hybrid motor starter for starting 3~ AC motors up to 500 V AC and 9 A output current, with adjustable overload shutdown, emergency stop function up to SIL 3/PL e, and Push-in connection. Connection to IO-Link.

Commercial data

Item number	2908672
Packing unit	1 pc
Minimum order quantity	1 pc
Sales key	DK7433
Product key	DK7433
GTIN	4055626321271
Weight per piece (including packing)	237.05 g
Weight per piece (excluding packing)	211.54 g
Customs tariff number	85371098
Country of origin	DE

Technical data

Notes

Notes on operation	If this device is to be used in combination with the CrossPowerSystem power distribution board, the device mount for the 16 A fuse (order designation: EM-CPS-DA-22,5F/16A; order number: 1002668) is required in order to attach the hybrid motor starter to the power distribution board.
Note on application	As things stand now, we are preparing the product so that, as of December 11, 2027, it will comply with the requirements of the EU Cyber Resilience Act (CRA) based on the information currently available regarding the CRA.

Product properties

Product type	Hybrid motor starters
Product family	CONTACTRON
Operating mode	100% operating factor

Electrical properties

Number of phases	3
Motor starter type	Direct starter
Switching frequency	≤ 2 Hz (Load-dependent)
Switching frequency	≤ 2 Hz (Load-dependent)
Maximum power dissipation	7 W
Minimum power dissipation	0.88 W
Coordination type	1

Supply

Rated control circuit supply voltage U_S	24 V DC
Control supply voltage range	19.2 V DC ... 30 V DC
Rated control supply current I_S	65 mA
Protective circuit	Surge protection
	Reverse polarity protection; Parallel polarity protection diode

Supply: IO-Link

Nominal voltage for I/O supply	24 V DC (This supply voltage is provided via the IO-Link interface of the IO-Link master.)
Current consumption	typ. 65 mA ±15 % (24 V DC)
	max. 150 mA
Protective circuit	Reverse polarity protection
	Short-circuit protection
	Overload protection

Insulation characteristics

Rated insulation voltage	550 V
Rated surge voltage	6 kV
Overvoltage category	III

Degree of pollution	2
Insulation characteristics between the control input and control supply voltage, and auxiliary circuit to the main circuit	Safe isolation (IEC 60947-1)
Isolation characteristics between the control input and control supply voltage to auxiliary circuit	Safe isolation (IEC 60947-1) in the auxiliary circuit ≤ 300 V AC
	Safe isolation (EN 50178) in the auxiliary circuit ≤ 300 V AC

Emergency tripping

Operate threshold	> 60 A
Response time	< 0.5 s

Input data

Control

Input name	Enable input
Rated actuating voltage U_C	24 V DC
Triggering voltage range	19.2 V DC ... 30 V DC
Rated actuating current I_C	7 mA
Switching threshold	9.6 V (“0” signal)
	19.2 V (“1” signal)
Switching level	< 5 V DC (For EMERGENCY STOP)
Typical turn-off time	< 30 ms

IO-Link

Number of ports	1
Connection method	COMBICON
Connection technology	3-conductor
Specification	V1.1.1
Reverse polarity protection	yes
Cycle Time	30 ms
Amount of process data	8 Byte (Input data)
	2 Byte (Output data)

Output data

AC output

Note	1200 V semiconductor
Rated operating voltage U_e	500 V AC
Operating voltage range	42 V AC ... 550 V AC
Rated operating current I_e	9 A (AC-51)
	7 A (AC-53a)
Mains frequency	50/60 Hz
Load current range	1.5 A ... 9 A (see to derating)
Trigger characteristic in acc. with IEC 60947-4-2	Class 10A
Cooling time	20 min (for auto reset)
Leakage current	0 mA
Protective circuit	Surge protection; Varistor

Connection data

Control circuits

Connection method	Push-in connection
Stripping length	10 mm
Conductor cross-section rigid	0.2 mm² ... 2.5 mm²
Conductor cross-section flexible	0.2 mm² ... 2.5 mm²
Conductor cross-section AWG	24 ... 14

Load circuit

Connection method	Push-in connection
Stripping length	10 mm
Conductor cross-section rigid	0.2 mm² ... 2.5 mm²
Conductor cross-section flexible	0.2 mm² ... 2.5 mm²
Conductor cross-section AWG	24 ... 14

Signaling

Status display	LED (yellow)
Operating voltage display	Green LED
Error indication	Red LED

Dimensions

Width	22.5 mm
Height	127 mm
Depth	114 mm

Material specifications

Flammability rating according to UL 94 (Housing)	V0 (Housing)

Environmental and real-life conditions

Ambient conditions

Degree of protection	IP20
Ambient temperature (operation)	-5 °C ... 55 °C (observe derating)
Ambient temperature (storage/transport)	-40 °C ... 80 °C
Altitude	≤ 2000 m

Approvals

UL approval

Certificate	NLDX.E228652
	NRNT.E172140

Safety Integrity Level (SIL, IEC 61508)

Identification	≤ 3
Note	Safe shutdown

Performance Level (ISO 13849)

Identification	e
Note	Safe shutdown

Category (ISO 13849)

Identification	≤ 3
Note	Safe shutdown

UL data

SCCR	100 kA (480 V AC (fuse: 30 A class CC/30 A class J (high fault)))
	5 kA (480 V AC (fuse: 20 A RK5 (standard fault)))
FLA	7.6 A (480 V AC)
Group installation	20 A (class RK5, SCCR 5kA (480 V AC), #24 - 14 AWG max. solid and stranded)
	30 A (class CC or J, SCCR 100kA (480 V AC), #24 - 14 AWG max, solid and stranded)
Category code	NLDX / NRNT
Horsepower ratings	2 hp (208 V AC)
	2 hp (230 V AC)
	2 hp (240 V AC)
	5 hp (480 V AC)

Standards and regulations

Standards/regulations

Standards/regulations	IEC 60947-1
	EN 60947-4-2
	IEC 61508
	ISO 13849

Mounting

Mounting type	DIN rail mounting
Assembly note	alignable, for spacing see derating
Mounting position	vertical (horizontal DIN rail, motor output below)

Drawings

Block diagram

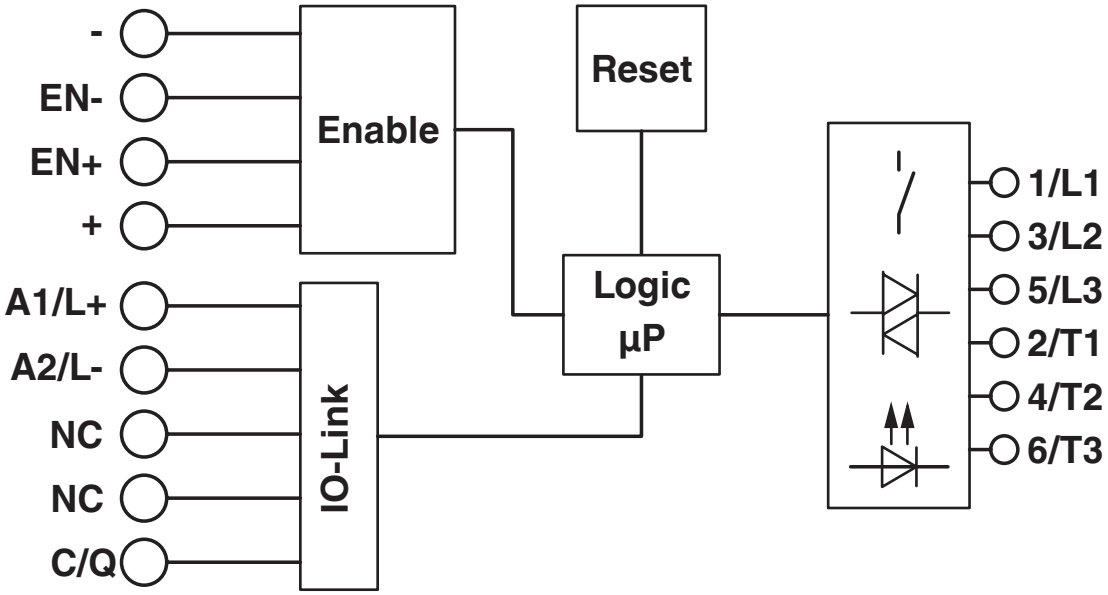

Approvals

To download certificates, visit the product detail page: https://www.phoenixcontact.com/gb/products/2908672

IECEE CB Scheme
Approval ID: CB-DE1-60807-A1

UL Listed
Approval ID: FILE E 172140

CCC
Approval ID: 2016010304900298

cUL Listed
Approval ID: FILE E 172140

cUL Listed
Approval ID: E228652

UL Listed
Approval ID: E228652

VDE Zeichengenehmigung
Approval ID: 40054426

CCC
Approval ID: 2024010304672814

Classifications

ECLASS

ECLASS-13.0	27370905
ECLASS-15.0	27370905
ECLASS-15.0 ASSET	27250101

ETIM

ETIM 10.0	EC001037

UNSPSC

UNSPSC 21.0	25173900

Environmental product compliance

EU RoHS

Fulfills EU RoHS substance requirements	Yes
Exemption	7(a), 7(c)-I

China RoHS

Environment friendly use period (EFUP)	EFUP-50
	An article-related China RoHS declaration table can be found in the download area for the respective article under "Manufacturer declaration". For all articles with EFUP-E, no China RoHS declaration table issued and required.

EU REACH SVHC

REACH candidate substance (CAS No.)	Lead(CAS: 7439-92-1)
SCIP	9b61d238-91bf-4423-847f-9874964f2f02

Phoenix Contact 2026 © - all rights reserved
https://www.phoenixcontact.com

PHOENIX CONTACT Ltd
Halesfield 13, Telford
Shropshire, TF7 4PG
01952 681700
info@phoenixcontact.co.uk