# QUINT4-BUFFER/24DC/40 - Buffer module

2908283

https://www.phoenixcontact.com/gb/products/2908283

Please be informed that the data shown in this PDF document is generated from our online catalog. Please find the complete data in the user documentation. Our general terms of use for downloads are valid.



QUINT buffer module with maintenance-free capacitor-based energy storage for DIN rail mounting, input: 24 V DC, output: 24 V DC/40 A, including mounted UTA 107 universal DIN rail adapter.

## Product description

Bridge failures lasting several seconds with the buffer modules from the QUINT range for DIN rails. The QUINT BUFFER combines an electronic switch-over unit and maintenance-free, capacitor-based energy storage in the same housing.

## Your advantages

- Space savings, thanks to the compact design
- Maintenance-free due to electrolytic capacitors
- Thanks to soft start, can also be used with power supplies in the low power range

ELEKTROGERÄTE RÜCKNAHME

## Commercial data

| | |
|---|---|
| Item number | 2908283 |
| Packing unit | 1 pc |
| Minimum order quantity | 1 pc |
| Sales key | CMUIE3 |
| Product key | CMUIE3 |
| GTIN | 4055626309200 |
| Weight per piece (including packing) | 1,372 g |
| Weight per piece (excluding packing) | 980 g |
| Customs tariff number | 85322200 |
| Country of origin | CN |

# Technical data

## Input data

| | |
|---|---|
| Input voltage range | 22.5 V DC ... 30 V DC |
| Fixed backup threshold | < 22 V DC |
| Voltage type of supply voltage | DC |
| Current consumption $I_{max}$ ($U_N$, $I_{OUT}$ = $I_{Stat.Boost}$, $I_{Charge}$ = max) | 46 A (max.) |
| Current consumption $I_{No-Load}$($U_N$, $I_{OUT}$ = 0, $I_{charge}$ = 0) | 0.2 A (No-load) |
| Current consumption $I_{charge}$ ($U_N$, $I_{OUT}$ = 0, $I_{charge}$ = max) | 0.8 A (charging process) |
| Buffer time | 0.2 s (40 A) |
| | 2 s (4 A) |

## Output data

| | |
|---|---|
| Efficiency | > 98 % (with charged energy storage device) |
| Connection in parallel | no |
| Connection in series | no |

Mains operation

| | |
|---|---|
| Output voltage | 24 V DC (depending on the input voltage) |
| Output current $I_N$ | 40 A |
| Power loss nominal load max. | < 9 W |

Buffer mode

| | |
|---|---|
| Output voltage | typ. 22 V DC |
| Output current $I_N$ | 40 A (depending on output current) |
| Static Boost ($I_{Stat.Boost}$) | 45 A |

## Energy storage

Input

| | |
|---|---|
| Nominal capacity | 2 mAh |

General

| | |
|---|---|
| IQ-Technology | no |
| Storage medium | Electrolytic capacitor |

## Signaling

Signal state UIN OK

| | |
|---|---|
| Connection labeling | 3.1, 3.2 |
| Switching output | Electronic relays (OptoMOS) |
| State (configurable) | $U_{In}$ OK |
| Output voltage | 30 V DC |
| Output can be loaded | 200 mA |
| LED status indicator | green ($U_{In}$ OK) |
| Signal threshold | Input voltage in the valid range |

Signal state Ready

| | |
|---|---|
| Connection labeling | 3.3 |
| Switching output | Transistor output, active |
| State (configurable) | Ready |
| State condition (configurable) | State of charge = 100% or buffer mode |
| Output voltage | 24 V ($U_N$ - 2 V (typical)) |
| Output can be loaded | 20 mA |
| LED status indicator | green (Ready) |

Signal ground SGnd

| | |
|---|---|
| Connection labeling | 3.4 |
| Function | Signal ground |
| Reference potential | 3.3 Ready |

## Electrical properties

| | |
|---|---|
| Insulation voltage input, output / housing | 500 V |

## Product properties

| | |
|---|---|
| Product type | Buffer module |
| Product family | QUINT BUFFER |
| MTBF (IEC 61709, SN 29500) | 2813895 h (40 °C) |

Insulation characteristics

| | |
|---|---|
| Protection class | Special application (SELV input voltage, hazardous voltages are generated in the device). |
| Overvoltage category | I |
| Degree of pollution | 2 |

Life expectancy (electrolytic capacitors)

| | |
|---|---|
| Current | 20 A |
| Temperature | 30 °C |
| Time | 288935 h |

Life expectancy (electrolytic capacitors)

| | |
|---|---|
| Current | 20 A |
| Temperature | 40 °C |
| Time | 144468 h |

Life expectancy (electrolytic capacitors)

| | |
|---|---|
| Current | 20 A |
| Temperature | 45 °C |
| Time | 102154 h |

Life expectancy (electrolytic capacitors)

| | |
|---|---|
| Current | 20 A |
| Temperature | 50 °C |
| Time | 72234 h |

Life expectancy (electrolytic capacitors)

| | |
|---|---|
| Current | 20 A |
| Temperature | 60 °C |
| Time | 36117 h |

## Dimensions

Item dimensions

| | |
|---|---|
| Width | 72 mm |
| Height | 130 mm |
| Depth | 125 mm |

Installation dimensions

| | |
|---|---|
| Installation distance right/left | 0 mm / 0 mm |
| Installation distance top/bottom | 50 mm / 50 mm |

## Mounting

| | |
|---|---|
| Assembly note | alignable: horizontally 0 mm, vertically 50 mm |
| Mounting position | horizontal DIN rail NS 35, EN 60715 |

## Material specifications

| | |
|---|---|
| Housing material | Metal |

## Environmental and real-life conditions

Ambient conditions

| | |
|---|---|
| Degree of protection | IP20 |
| Ambient temperature (operation) | -25 °C ... 70 °C (> 40 °C Derating: 0.56 %/K / > 60 °C Derating: 2.5 %/K) |
| Ambient temperature (storage/transport) | -40 °C ... 70 °C |
| Ambient temperature (start-up type tested) | -40 °C |
| Maximum altitude | ≤ 4000 m |
| Climatic class | 3K3 (in acc. with EN 60721) |
| Max. permissible relative humidity (operation) | ≤ 95 % |

## Standards and regulations

Electrical safety

| | |
|---|---|
| Standard designation | Electrical safety |
| Standards/specifications | IEC 60950-1/VDE 0805 (SELV) |

## Approvals

UL

| | |
|---|---|
| Identification | UL Listed UL 508 |

UL

| | |
|---|---|
| Identification | UL/C-UL Recognized UL 60950-1 |

UL

| | |
|---|---|
| Identification | UL ANSI/ISA-12.12.01 Class I, Division 2, Groups A, B, C, D (Hazardous Location) |

## EMC data

| | |
|---|---|
| Electromagnetic compatibility | Conformance with EMC Directive 2014/30/EU |
| EMC requirements for noise emission | EN 61000-6-3 |
| | EN 61000-6-4 |
| EMC requirements for noise immunity | EN 61000-6-1 |
| | EN 61000-6-2 |

Noise emission

| | |
|---|---|
| Standards/regulations | EN 55016 |
| | EN 61000-6-3 |

Electrostatic discharge

| | |
|---|---|
| Standards/regulations | EN 61000-4-2 |

Electrostatic discharge

| | |
|---|---|
| Contact discharge | 6 kV (Test Level 3) |
| Discharge in air | 8 kV (Test Level 3) |
| Comments | Criterion A |

Electromagnetic HF field

| | |
|---|---|
| Standards/regulations | EN 61000-4-3 |

Electromagnetic HF field

| | |
|---|---|
| Frequency range | 80 MHz ... 6 GHz |
| Test field strength | 10 V/m |
| Comments | Criterion A |

Fast transients (burst)

| | |
|---|---|
| Standards/regulations | EN 61000-4-4 |

Fast transients (burst)

| | |
|---|---|
| Input | 2 kV (Test Level 3 - asymmetrical) |
| Output | 2 kV (Test Level 3 - asymmetrical) |
| Signal | 2 kV (Test Level 3 - asymmetrical) |
| Comments | Criterion A |

Surge voltage load (surge)

| | |
|---|---|
| Input | 1 kV (Test Level 2 - symmetrical) |
| | 2 kV (Test Level 3 - asymmetrical) |
| Output | 1 kV (Test Level 2 - symmetrical) |
| | 2 kV (Test Level 3 - asymmetrical) |
| Signal | 1 kV (Test Level 2 - asymmetrical) |

| | |
|---|---|
| Comments | Criterion A |

Conducted interference

| | |
|---|---|
| Standards/regulations | EN 61000-4-6 |

Conducted interference

| | |
|---|---|
| Frequency range | 0.15 MHz ... 80 MHz |
| Comments | Criterion A |
| Voltage | 10 V |

Criteria

| | |
|---|---|
| Criterion A | Normal operating behavior within the specified limits. |
| Criterion B | Temporary impairment to operational behavior that is corrected by the device itself. |

## Drawings

Block diagram

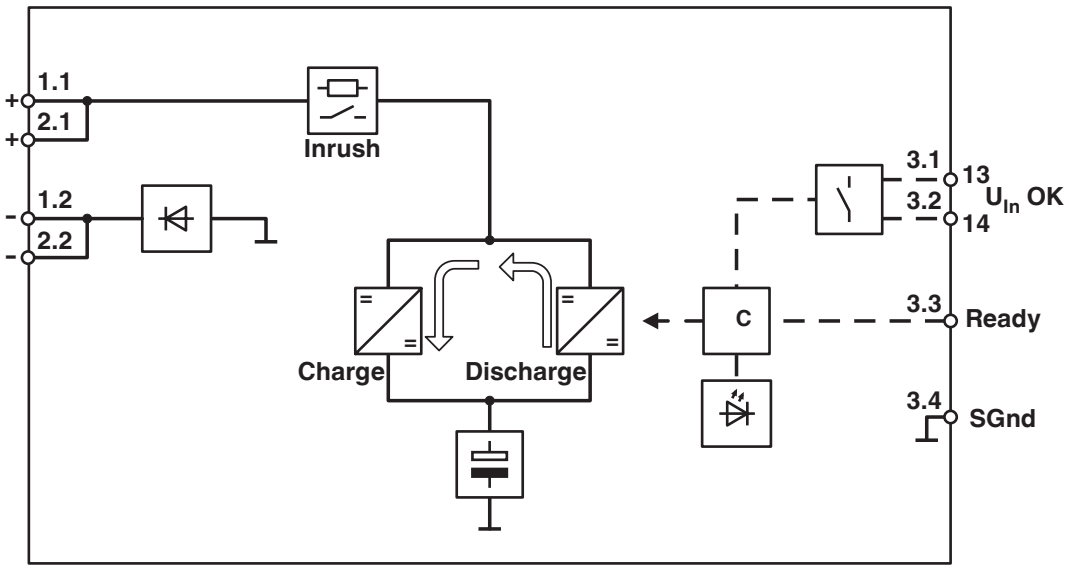


Graphic

| Load Current | Buffertime Seconds 0.1 | 0.3 | 0.4 | 0.5 | 1 | 1.5 | 6 | 7 | 9 | 12 | 14 | 16 | 18 | 19 | 25 | 30 |
|---|---|---|---|---|---|---|---|---|---|---|---|---|---|---|---|---|
| 0.1 A | | | | | | | | | | | | | | | | |
| 0.25 A | | | | | | | | | | | | | | | | |
| 0.50 A | | | | | | | | | | | | | | | | |
| 0.75 A | | | | | | | | | | | | | | | | |
| 1 A | | | | | | | | | | | | | | | | |
| 5 A | | | | | | | | | | | | | | | | |
| 10 A | | | | | | | | | | | | | | | | |
| 20 A | | | | | | | | | | | | | | | | |
| 30 A | | | | | | | | | | | | | | | | |
| 40 A | | | | | | | | | | | | | | | | |

The data is based on an ambient temperature of +25 °C at the start of use.

**2907913** QUINT4-BUFFER/24DC/20 **2908283** QUINT4-BUFFER/24DC/40

QUINT BUFFER buffer times

## Approvals

To download certificates, visit the product detail page: https://www.phoenixcontact.com/gb/products/2908283

**cUL Recognized**
Approval ID: E211944

**UL Recognized**
Approval ID: E211944

**EAC**
Approval ID: RU S-DE.BL08.W.00764

**UL Listed**
Approval ID: E123528

**cUL Listed**
Approval ID: E123528

**IECEE CB Scheme**
Approval ID: DE/PTZ/0063

**cUL Listed**
Approval ID: E199827

**UL Listed**
Approval ID: E199827

## Classifications

### ECLASS

| | |
|---|---|
| ECLASS-13.0 | 27040692 |
| ECLASS-15.0 | 27040692 |

### ETIM

| | |
|---|---|
| ETIM 10.0 | EC002850 |

### UNSPSC

| | |
|---|---|
| UNSPSC 21.0 | 26111700 |

## Environmental product compliance

EU RoHS

| | |
|---|---|
| Fulfills EU RoHS substance requirements | Yes |
| Exemption | 6(c), 7(a), 7(c)-I |

China RoHS

| | |
|---|---|
| Environment friendly use period (EFUP) | EFUP-25 |
| | An article-related China RoHS declaration table can be found in the download area for the respective article under "Manufacturer declaration". For all articles with EFUP-E, no China RoHS declaration table issued and required. |

EU REACH SVHC

| | |
|---|---|
| REACH candidate substance (CAS No.) | Diboron trioxide(CAS: 1303-86-2) |
| | Lead monoxide (lead oxide)(CAS: 1317-36-8) |
| | Lead(CAS: 7439-92-1) |
| SCIP | e81279e6-c2ff-4854-8ec5-6cd64b3c3168 |

EF3.1 Climate Change

| | |
|---|---|
| CO2e kg | 21.98 kg CO2e |


Phoenix Contact 2026 © - all rights reserved
https://www.phoenixcontact.com



PHOENIX CONTACT Ltd
Halesfield 13, Telford
Shropshire, TF7 4PG
01952 681700
info@phoenixcontact.co.uk