TMC 8 B END CAP - Wiring bridge end cover

2907999

https://www.phoenixcontact.com/gb/products/2907999

Please be informed that the data shown in this PDF document is generated from our online catalog. Please find the complete data in the user documentation. Our general terms of use for downloads are valid.

Protective end covers for TMC 8 bus bars



ELEKTROGERÄTE RÜCKNAHME

Commercial data

Item number	2907999
Packing unit	10 pc
Minimum order quantity	10 pc
Sales key	CLA125
Product key	CLA125
GTIN	4055626352978
Weight per piece (including packing)	2.78 g
Weight per piece (excluding packing)	4 g
Customs tariff number	85362010
Country of origin	US

Technical data

Product properties

Product type	Circuit breakers
Type	Cover

Material specifications

Color	light gray (RAL 7035)

Drawings

Dimensional drawing

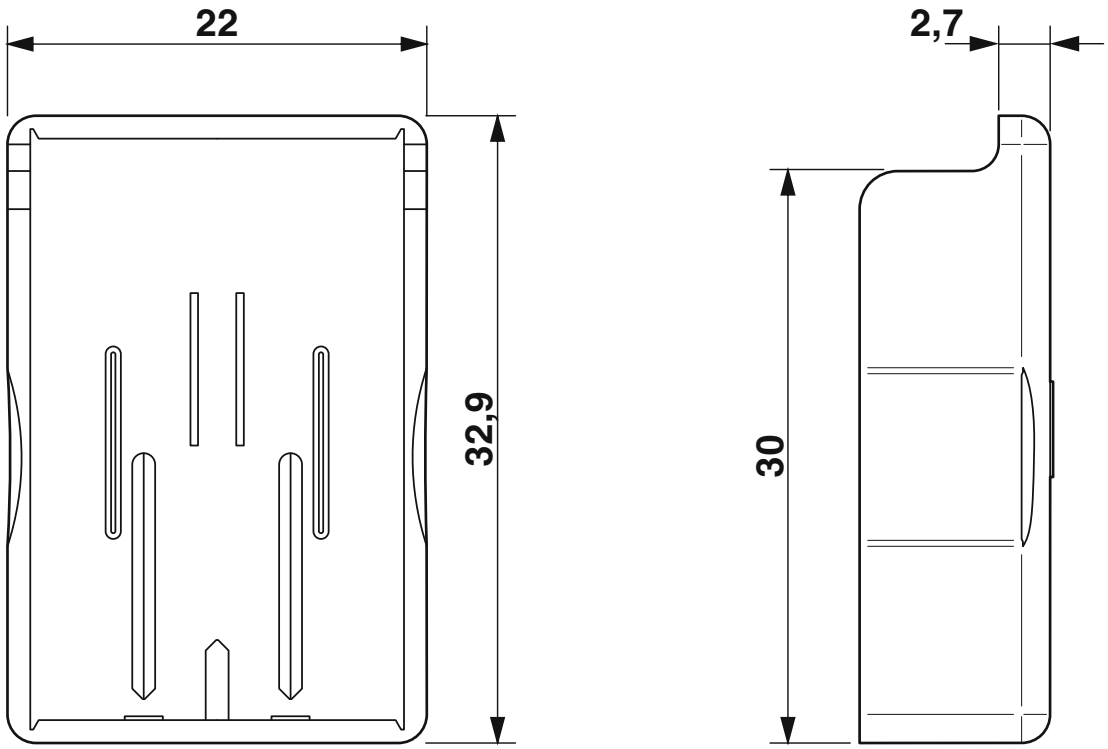

Approvals

To download certificates, visit the product detail page: https://www.phoenixcontact.com/gb/products/2907999

UL Listed
Approval ID: E123528

cUL Listed
Approval ID: E123528

Classifications

ECLASS

ECLASS-13.0	27140492
ECLASS-15.0	27140492

ETIM

ETIM 10.0	EC002936

Environmental product compliance

EU RoHS

Fulfills EU RoHS substance requirements	Yes, No exemptions

China RoHS

Environment friendly use period (EFUP)	EFUP-E
	No hazardous substances above the limits

EU REACH SVHC

REACH candidate substance (CAS No.)	No substance above 0.1 wt%

EF3.1 Climate Change

CO2e kg	0.072 kg CO2e

Phoenix Contact 2026 © - all rights reserved
https://www.phoenixcontact.com

PHOENIX CONTACT Ltd
Halesfield 13, Telford
Shropshire, TF7 4PG
01952 681700
info@phoenixcontact.co.uk