# MACX MCR-SL-2I-2I-HV-ILP - Input isolator

2907706

https://www.phoenixcontact.com/gb/products/2907706

Please be informed that the data shown in this PDF document is generated from our online catalog. Please find the complete data in the user documentation. Our general terms of use for downloads are valid.



2-channel input loop-powered 2-way isolator with increased cut-off voltage and plug-in connection technology for the electrical isolation of analog signals. Input signal = output signal: 0(4) mA ... 20 mA. Screw connection technology

## Product description

Two-channel input-loop-powered 2-way isolator with increased cut-off voltage and plug-in connection technology for the electrical isolation and filtering of analog signals. The input-loop-powered isolator allows operation with active sensor technology with a supply voltage of 6 V DC to 30 V DC. The device is powered via the current loop of the sensor. Input signal = output signal: 0(4) mA to 20 mA. With screw connection.

## Commercial data

| | |
|---|---|
| Item number | 2907706 |
| Packing unit | 1 pc |
| Minimum order quantity | 1 pc |
| Sales key | DK1113 |
| Product key | DK1113 |
| GTIN | 4055626219264 |
| Weight per piece (including packing) | 155.1 g |
| Weight per piece (excluding packing) | 128.4 g |
| Customs tariff number | 85437090 |
| Country of origin | DE |

# Technical data

## Product properties

| | |
|---|---|
| Product type | Signal conditioner |
| Product family | MACX Analog |
| No. of channels | 2 |

## Electrical properties

| | |
|---|---|
| Electrical isolation | 2-way isolation |
| Electrical isolation between input and output | yes |
| Signal transmission behavior | In = Out |
| Maximum temperature coefficient | ≤ 0.002 %/K (of measured value / 100 Ω load) |
| Transmission error, typical | 0.08 % (of final value) |

Electrical isolation

| | |
|---|---|
| Test voltage | 5 kV AC (50 Hz, 60 s) |
| Overvoltage category | II |
| Pollution degree | 2 |

Electrical isolation Input/output/power supply IEC/EN 61010-1

| | |
|---|---|
| Standards/regulations | IEC/EN 61010-1 |
| Rated insulation voltage | 600 $V_{rms}$ |
| Insulation | Safe isolation |

Supply

| | |
|---|---|
| Supply voltage range | loop-powered, no external supply necessary |

## Input data

Signal: Current

| | |
|---|---|
| Number of inputs | 2 |
| Configurable/programmable | no |
| Max. voltage input signal | < 30.5 V |
| Current input signal | 0 mA ... 20 mA |
| | 4 mA ... 20 mA |
| Input voltage limitation | 30.5 V |
| Voltage dissipation | 2.9 V (I = 20 mA) |
| Step response (10-90%) | 5 ms (500 Ω load) |
| Additional error, load-dependent | 0.022 % (of measured value / 100 Ω load) |
| Response current | ~ 50 µA |

## Output data

Signal: Current

| | |
|---|---|
| Number of outputs | 2 |
| Configurable/programmable | no |

| | |
|---|---|
| Max. voltage output signal | 27.5 V |
| Current output signal | 0 mA ... 20 mA |
| | 4 mA ... 20 mA |
| Load/output load current output | ≤ 1375 Ω (I = 20 mA) |
| Residual ripple | < 10 $mV_{rms}$ (500 Ω load) |

## Connection data

| | |
|---|---|
| Connection method | Screw connection |
| Stripping length | 7 mm |
| Screw thread | M3 |
| Conductor cross-section rigid | 0.2 mm² ... 2.5 mm² |
| Conductor cross-section flexible | 0.2 mm² ... 2.5 mm² |
| Conductor cross-section AWG | 24 ... 14 |
| Tightening torque | 0.5 Nm ... 0.6 Nm |

Test socket

| | |
|---|---|
| Max. diameter | 2.3 mm |

## Ex data

| | |
|---|---|
| Ex installation (EPL) | Gc |
| | Div. 2 |

## Dimensions

| | |
|---|---|
| Dimensional drawing | 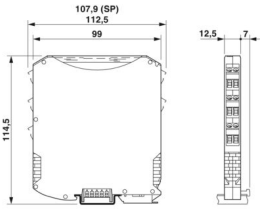 |
| Width | 12.5 mm |
| Height | 112.5 mm |
| Depth | 113.7 mm |
| Depth NS 35/7,5 | 114.5 mm (Snapped onto DIN rail NS 35/7,5 in accordance with EN 60715) |

## Material specifications

| | |
|---|---|
| Color | gray (RAL 7042) |
| Flammability rating according to UL 94 (Housing) | V0 (Housing) |
| Housing material | PA 6.6-FR |

## Environmental and real-life conditions

Ambient conditions

| | |
|---|---|
| Degree of protection | IP20 (not assessed by UL) |
| Ambient temperature (operation) | -40 °C ... 85 °C |

| | |
|---|---|
| Ambient temperature (storage/transport) | -40 °C ... 85 °C |
| Altitude | ≤ 2000 m |
| Permissible humidity (operation) | 5 % ... 95 % (non-condensing) |

## Approvals

CE

| | |
|---|---|
| Certificate | CE-compliant |
| Note | and EN 61326-1 |

ATEX

| | |
|---|---|
| Identification | Ⓔx II 3 G Ex nA IIC T4 Gc X |
| Certificate | PxCIF15ATEX2905278X |

UL, USA/Canada

| | |
|---|---|
| Identification | UL 61010 Listed |
| | Class I, Div. 2, Groups A, B, C, D T4 |
| | Class I, Zone 2, Group IIC T4 |

Safety Integrity Level (SIL, IEC 61508)

| | |
|---|---|
| Identification | 3 |
| Certificate | 968/FSP 1200.01/21 |

## EMC data

| | |
|---|---|
| Electromagnetic compatibility | Conformance with EMC directive |
| Noise immunity | EN 61326-1 |

Noise emission

| | |
|---|---|
| Standards/regulations | EN 61000-6-4 |

## Standards and regulations

| | |
|---|---|
| Electrical isolation | 2-way isolation |
| Standards/regulations | EN/IEC 60079-0 |
| | EN/IEC 60079-7 |

## Mounting

| | |
|---|---|
| Mounting type | DIN rail mounting |

## Drawings

Dimensional drawing

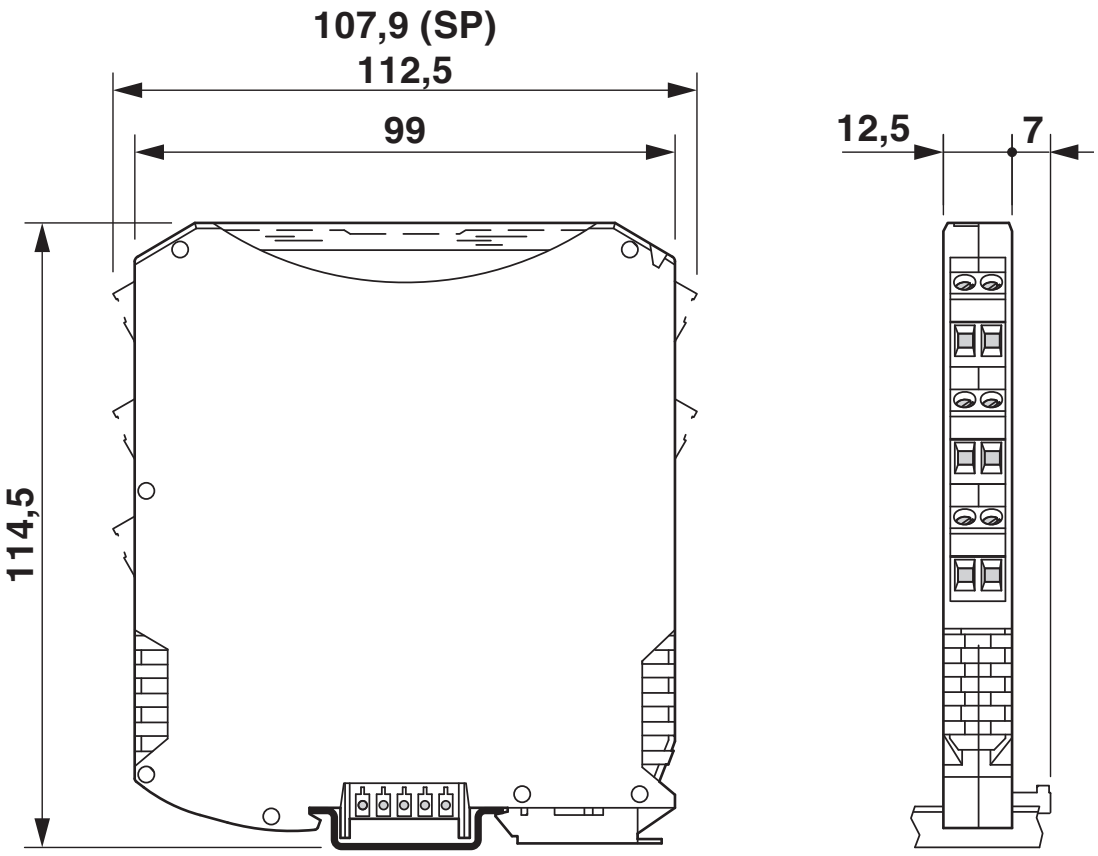

Block diagram

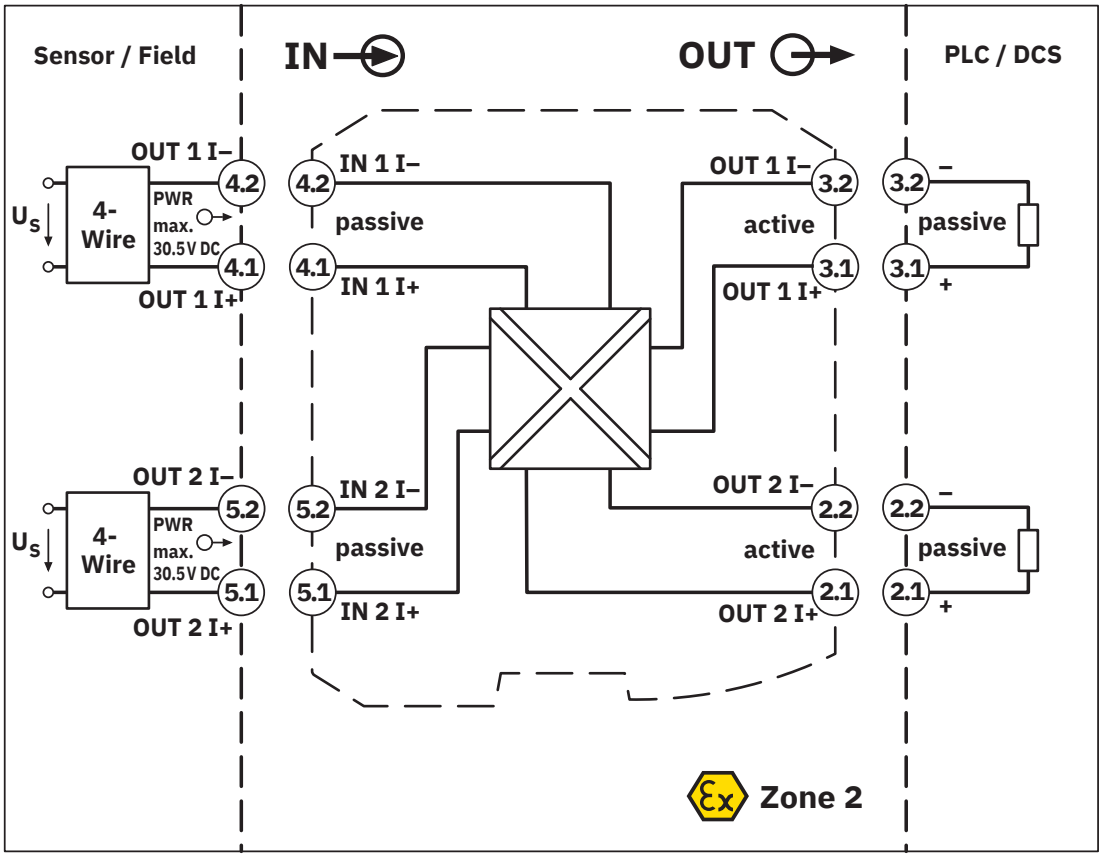

## Classifications

### ECLASS

| | |
|---|---|
| ECLASS-13.0 | 27210120 |
| ECLASS-15.0 | 27210120 |

### ETIM

| | |
|---|---|
| ETIM 10.0 | EC002653 |

### UNSPSC

| | |
|---|---|
| UNSPSC 21.0 | 39121000 |

## Environmental product compliance

EU RoHS

| | |
|---|---|
| Fulfills EU RoHS substance requirements | Yes |
| Exemption | 7(a), 7(c)-I |

China RoHS

| | |
|---|---|
| Environment friendly use period (EFUP) | EFUP-50 |
| | An article-related China RoHS declaration table can be found in the download area for the respective article under "Manufacturer declaration". For all articles with EFUP-E, no China RoHS declaration table issued and required. |

EU REACH SVHC

| | |
|---|---|
| REACH candidate substance (CAS No.) | Lead(CAS: 7439-92-1) |
| SCIP | 3a627ece-0e1f-4977-a7ee-32b3bc082bce |

Phoenix Contact 2026 © - all rights reserved
https://www.phoenixcontact.com

PHOENIX CONTACT Ltd
Halesfield 13, Telford
Shropshire, TF7 4PG
01952 681700
info@phoenixcontact.co.uk