TMC 83D 15A - Power circuit breaker

2907687

https://www.phoenixcontact.com/gb/products/2907687

Please be informed that the data shown in this PDF document is generated from our online catalog. Please find the complete data in the user documentation. Our general terms of use for downloads are valid.



Thermal-magnetic Power circuit breaker, 3-position, use: Branch Circuit Protection (UL 489), for protection against overload with a breaking capacity of 10 kA, tripping characteristic: D, mounting type: NS 35/..., rated current: 15 A

Product description

CCC marking on the product is only present on products purchased from Phoenix Contact China.

Your advantages

- Can be used worldwide due to international approvals
- Suitable for various grid types, as it is available in 1-, 2-, 3-pos. versions
- Ideally coordinated protection due to various tripping characteristics and a wide selection of nominal currents
- Reduced inventory because of suitability for AC and DC applications
- Optional accessories enable remote control and monitoring

ELEKTROGERÄTE RÜCKNAHME

Commercial data

Item number	2907687
Packing unit	4 pc
Minimum order quantity	1 pc
Sales key	CLA125
Product key	CLA125
GTIN	4055626216263
Weight per piece (including packing)	406.75 g
Weight per piece (excluding packing)	393 g
Customs tariff number	85362010

Country of origin	Information on the country of origin is provided with the delivery.

Technical data

Product properties

Product type	Circuit breakers
Product family	TMC 8
Type	DIN rail module, one-piece
Number of positions	3
Mechanical service life	20000
Special properties	Branch Circuit Protection (UL 489), for protection against overload with a breaking capacity of 10 kA Thermal-magnetic

Electrical properties

Service life electrical	6000

General

Operating voltage	277 V AC (277/480Y, 240D)
Rated current I_N	15 A
Tripping method	TM (thermal-magnetic)
Rated short-circuit switching capacity I_{cn}	10 kA (IC)
Fuse	D
Contact switching type	none

Connection data

Conductor cross-section rigid	1 mm² ... 35 mm²
Cross section AWG	18 ... 2 (converted acc. to IEC)
Conductor cross-section flexible	1 mm² ... 35 mm²
Connection method	Screw connection
Tightening torque, min	2 Nm
Tightening torque	2 Nm
Stripping length	11 mm ... 12 mm
Conductor cross-section flexible max.	35 mm²
Conductor cross-section, rigid max.	35 mm²
Conductor cross-section flexible	1 mm² ... 35 mm²
Conductor cross-section rigid	1 mm² ... 35 mm²
Conductor cross-section AWG	18 ... 2

Dimensions

Dimensional drawing	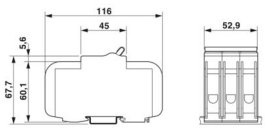
Width	52.9 mm
Height	116 mm
Depth	76.6 mm (incl. DIN rail 7.5 mm)

Material specifications

Color	light gray (RAL 7035)
	orange (RAL 2003)
Flammability rating according to UL 94	V-0

Environmental and real-life conditions

Ambient conditions

Ambient temperature (operation)	-35 °C ... 70 °C
Humidity test	48 h, 95% RH, 40°C (IEC 60068-2-78)
Shock (operation)	30g (11 ms) (IEC 60068-2-11)
Vibration (operation)	±0,38 mm (10 Hz ... 57 Hz), 5g (57 Hz ... 500 Hz) (IEC 60068-2-6, Fc, sine)

Standards and regulations

Standards/specifications	UL 489
	IEC 60947-2

Mounting

Mounting type	NS 35/...

Drawings

Dimensional drawing

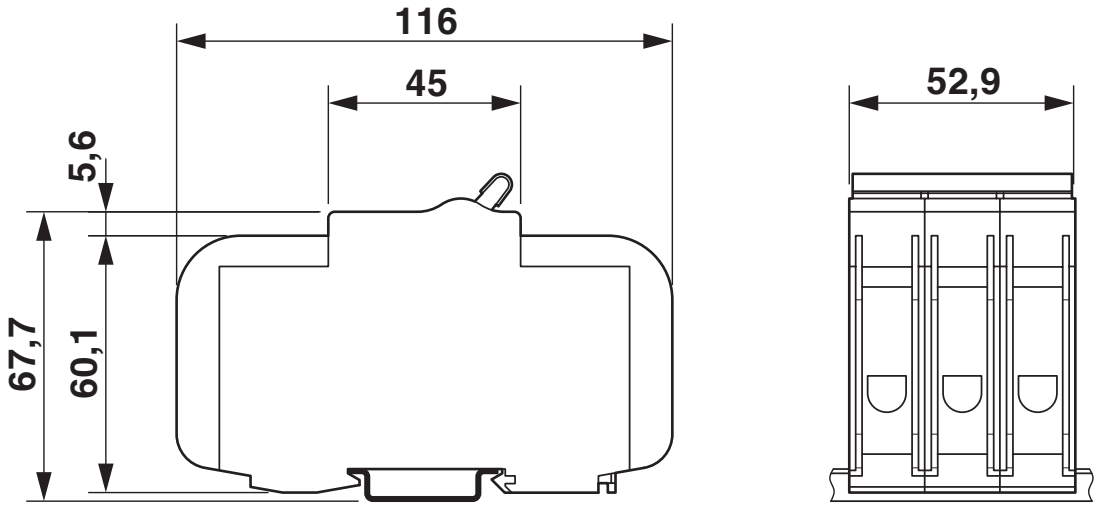

Diagram

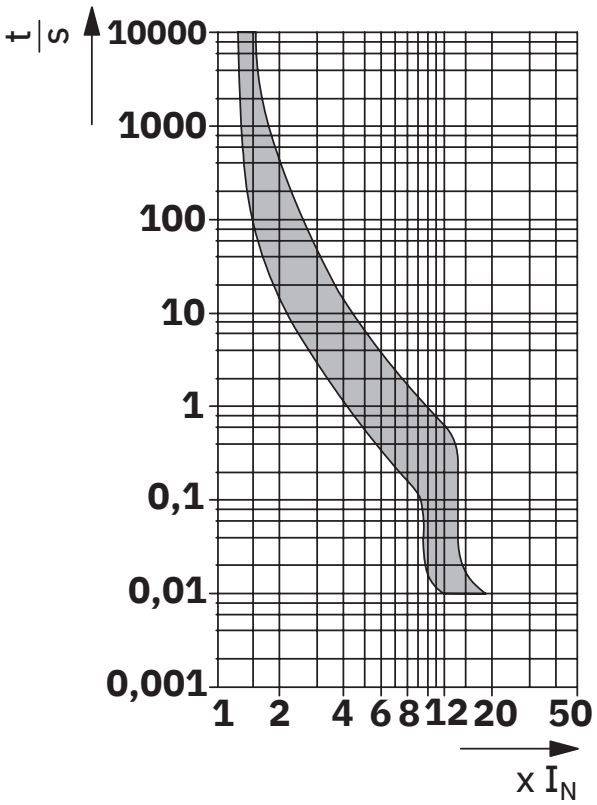

Approvals

To download certificates, visit the product detail page: https://www.phoenixcontact.com/gb/products/2907687

UL Listed
Approval ID: FILE E 320373

cUL Listed
Approval ID: FILE E 320373

TÜV Rheinland
Approval ID: R 50531587

CCC
Approval ID: 2024010307673885

Classifications

ECLASS

ECLASS-13.0	27140401
ECLASS-15.0	27140401

ETIM

ETIM 10.0	EC003538

UNSPSC

UNSPSC 21.0	39121410

Environmental product compliance

EU RoHS

Fulfills EU RoHS substance requirements	Yes, No exemptions

China RoHS

Environment friendly use period (EFUP)	EFUP-E
	No hazardous substances above the limits

EU REACH SVHC

REACH candidate substance (CAS No.)	No substance above 0.1 wt%

EF3.1 Climate Change

CO2e kg	13.674 kg CO2e

Phoenix Contact 2026 © - all rights reserved
https://www.phoenixcontact.com

PHOENIX CONTACT Ltd
Halesfield 13, Telford
Shropshire, TF7 4PG
01952 681700
info@phoenixcontact.co.uk