# TMC 83C 08A - Power circuit breaker

2907614

https://www.phoenixcontact.com/gb/products/2907614

Please be informed that the data shown in this PDF document is generated from our online catalog. Please find the complete data in the user documentation. Our general terms of use for downloads are valid.



Thermal-magnetic Power circuit breaker, 3-position, use: Branch Circuit Protection (UL 489), for protection against overload with a breaking capacity of 10 kA, tripping characteristic: C, mounting type: NS 35/..., rated current: 8 A

## Product description

CCC marking on the product is only present on products purchased from Phoenix Contact China.

## Your advantages

- Can be used worldwide due to international approvals
- Suitable for various grid types, as it is available in 1-, 2-, 3-pos. versions
- Ideally coordinated protection due to various tripping characteristics and a wide selection of nominal currents
- Reduced inventory because of suitability for AC and DC applications
- Optional accessories enable remote control and monitoring

ELEKTROGERÄTE RÜCKNAHME

## Commercial data

| | |
|---|---|
| Item number | 2907614 |
| Packing unit | 1 pc |
| Minimum order quantity | 4 pc |
| Sales key | CLA125 |
| Product key | CLA125 |
| GTIN | 4055626215969 |
| Weight per piece (including packing) | 222.222 g |
| Weight per piece (excluding packing) | 393 g |
| Customs tariff number | 85362010 |

| | |
|---|---|
| Country of origin | Information on the country of origin is provided with the delivery. |

## Technical data

### Product properties

| | |
|---|---|
| Product type | Circuit breakers |
| Product family | TMC 8 |
| Type | DIN rail module, one-piece |
| Number of positions | 3 |
| Mechanical service life | 20000 |
| Special properties | Branch Circuit Protection (UL 489), for protection against overload with a breaking capacity of 10 kA Thermal-magnetic |

### Electrical properties

| | |
|---|---|
| Service life electrical | 6000 |

General

| | |
|---|---|
| Operating voltage | 277 V AC (277/480Y, 240D) |
| Rated current $I_N$ | 8 A |
| Tripping method | TM (thermal-magnetic) |
| Rated short-circuit switching capacity $I_{cn}$ | 10 kA (IC) |
| Fuse | C |
| Contact switching type | none |

### Connection data

| | |
|---|---|
| Conductor cross-section rigid | 1 mm² ... 35 mm² |
| Cross section AWG | 18 ... 2 (converted acc. to IEC) |
| Conductor cross-section flexible | 1 mm² ... 35 mm² |
| Connection method | Screw connection |
| Tightening torque, min | 2 Nm |
| Tightening torque | 2 Nm |
| Stripping length | 11 mm ... 12 mm |
| Conductor cross-section flexible max. | 35 mm² |
| Conductor cross-section, rigid max. | 35 mm² |
| Conductor cross-section flexible | 1 mm² ... 35 mm² |
| Conductor cross-section rigid | 1 mm² ... 35 mm² |
| Conductor cross-section AWG | 18 ... 2 |

### Dimensions

| | |
|---|---|
| Dimensional drawing | 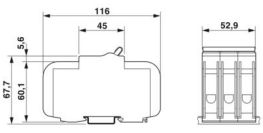  |
| Width | 52.9 mm |
| Height | 116 mm |
| Depth | 76.6 mm (incl. DIN rail 7.5 mm) |

## Material specifications

| | |
|---|---|
| Color | light gray (RAL 7035) |
| | orange (RAL 2003) |
| Flammability rating according to UL 94 | V-0 |

## Environmental and real-life conditions

Ambient conditions

| | |
|---|---|
| Ambient temperature (operation) | -35 °C ... 70 °C |
| Humidity test | 48 h, 95% RH, 40°C (IEC 60068-2-78) |
| Shock (operation) | 30g (11 ms) (IEC 60068-2-11) |
| Vibration (operation) | ±0,38 mm (10 Hz ... 57 Hz), 5g (57 Hz ... 500 Hz) (IEC 60068-2-6, Fc, sine) |

## Standards and regulations

| | |
|---|---|
| Standards/specifications | UL 489 |
| | IEC 60947-2 |

## Mounting

| | |
|---|---|
| Mounting type | NS 35/... |

## Drawings

Dimensional drawing

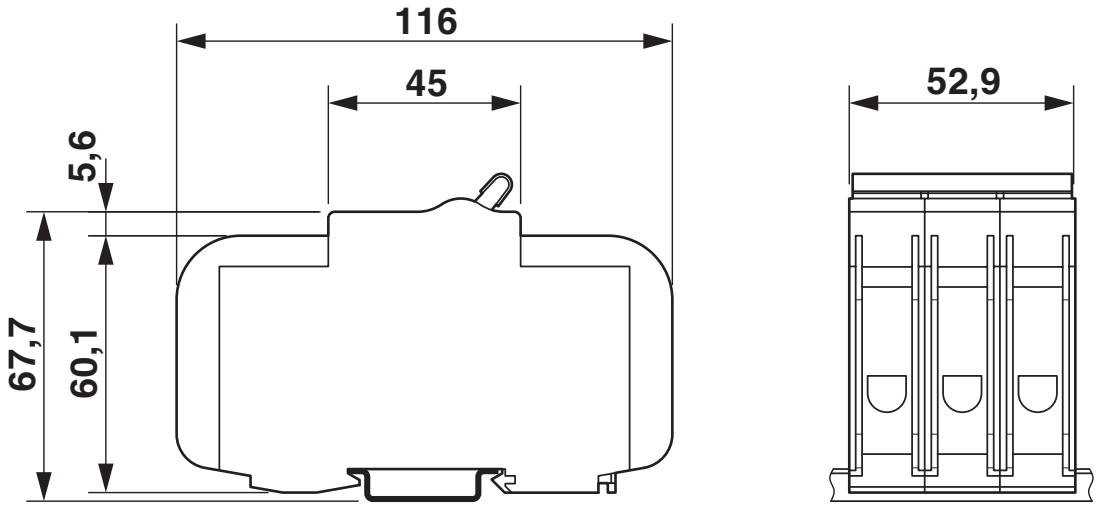


Diagram

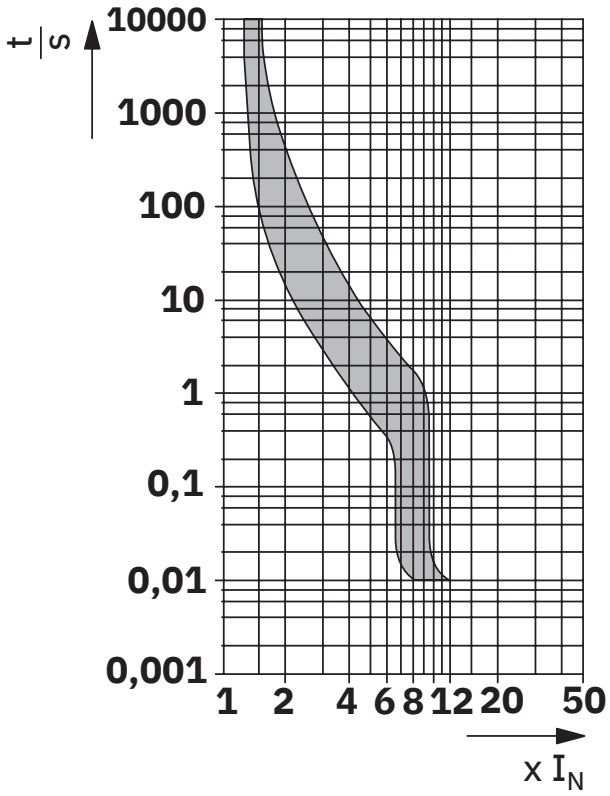

## Approvals

To download certificates, visit the product detail page: https://www.phoenixcontact.com/gb/products/2907614

**UL Listed**
Approval ID: FILE E 320373

**cUL Listed**
Approval ID: FILE E 320373

**TÜV Rheinland**
Approval ID: R 50531587

**CCC**
Approval ID: 2024010307673885

## Classifications

### ECLASS

| | |
|---|---|
| ECLASS-13.0 | 27140401 |
| ECLASS-15.0 | 27140401 |

### ETIM

| | |
|---|---|
| ETIM 10.0 | EC003538 |

### UNSPSC

| | |
|---|---|
| UNSPSC 21.0 | 39121410 |

## Environmental product compliance

EU RoHS

| | |
|---|---|
| Fulfills EU RoHS substance requirements | Yes, No exemptions |

China RoHS

| | |
|---|---|
| Environment friendly use period (EFUP) | EFUP-E |
| | No hazardous substances above the limits |

EU REACH SVHC

| | |
|---|---|
| REACH candidate substance (CAS No.) | No substance above 0.1 wt% |

EF3.1 Climate Change

| | |
|---|---|
| CO2e kg | 13.674 kg CO2e |


Phoenix Contact 2026 © - all rights reserved
https://www.phoenixcontact.com



PHOENIX CONTACT Ltd
Halesfield 13, Telford
Shropshire, TF7 4PG
01952 681700
info@phoenixcontact.co.uk