MACX MCR-EX-SL-NAM-HO-SP - NAMUR isolation switch amplifier

2907405

https://www.phoenixcontact.com/gb/products/2907405

Please be informed that the data shown in this PDF document is generated from our online catalog. Please find the complete data in the user documentation. Our general terms of use for downloads are valid.



Ex i NAMUR isolation amplifier. For operating Ex i proximity sensors and switches in hazardous areas. Passive transistor output (resistive, Honeywell-compatible), line fault transparency, up to SIL 2 according to IEC 61508; Push-in connection.

Your advantages

- Signal input: intrinsically safe [Ex ia]; for NAMUR proximity sensors (EN 60947-5-6) or switch contacts
- Signal output with resistive behavior (transistor), compatible with FC-RUSIO-3224 and FC-RUSLS-3224 universal safety IO modules from Honeywell
- Signal output with line fault transparency, line fault indication directly via the signal output
- Up to 5 kHz switching frequency
- Direction of operation can be selected
- Line fault detection (LFD) can be enabled and disabled
- SIL 2 according to IEC/EN 61508
- 3-way electrical isolation
- Power supply and error indication possible via DIN rail connector
- Plug-in connection terminals, push-in connection technology
- Installation in zone 2 permitted
- Housing width: 12.5 mm

Commercial data

Item number	2907405
Packing unit	1 pc
Minimum order quantity	1 pc
Sales key	DK1213
Product key	DK1213
GTIN	4055626200194
Weight per piece (including packing)	148 g
Weight per piece (excluding packing)	148 g
Customs tariff number	85365019
Country of origin	DE

Technical data

Product properties

Product type	Isolating switch amplifier
Product family	MACX Analog
No. of channels	1
Configuration	DIP switches

Insulation characteristics: GB Standard

Overvoltage category	II
Pollution degree	2

System properties

Functionality

Configuration	DIP switches

Electrical properties

Electrical isolation	3-way isolation
Electrical isolation between input and output	yes
Maximum power dissipation for nominal condition	1 W

Electrical isolation Input/output

Electrical isolation	375 V (Peak value in accordance with IEC/EN 60079-11)

Electrical isolation Input/output/supply, DIN rail connector

Rated insulation voltage	300 V_{rms}
Test voltage	2.5 kV AC (50 Hz, 60 s)
Insulation	Safe isolation in accordance with IEC/EN 61010-1

Electrical isolation Input/supply, DIN rail connector

Electrical isolation	375 V (Peak value in accordance with IEC/EN 60079-11)

Supported controller: HONEYWELL RUSIO

Suitable I/O card	FC-RUSIO-3224
	FC-RUSLS-3224

Supply

Nominal supply voltage	24 V DC
Supply voltage range	9.6 V DC ... 30 V DC (12 V DC ... 24 V DC (-20 % ... +25 %))
Power dissipation	< 0.6 W
Power consumption	< 600 mW

Input data

Signal: NAMUR

Description of the input	intrinsically safe
Number of inputs	1
Available input sources	NAMUR proximity sensors (IEC/EN 60947-5-6)
	floating switch contacts
	Switch contacts with resistance circuit
Switching threshold "0" signal current	< 1.2 mA (blocking)
Switching threshold "1" signal, current	> 2.1 mA (conductive)
Switching hysteresis	< 0.2 mA
Line fault detection	< 0.05 mA ... 0.35 mA (Line break)
	< 100 Ω ... 360 Ω (Short circuit)
	Activated /deactivated via DIP switch
Open-circuit voltage	8 V DC

Output data

Signal

Number of outputs	1

Connection data

Connection method	Push-in connection
Stripping length	8 mm
Conductor cross-section rigid	0.2 mm² ... 1.5 mm²
Conductor cross-section flexible	0.2 mm² ... 1.5 mm²
Conductor cross-section AWG	24 ... 16

Test socket

Max. diameter	2.3 mm

Ex data

Safety data

Max. internal inductance L_i	negligible
Max. internal capacitance C_i	negligible
Max. output voltage U_o	9.6 V
Max. output current I_o	10 mA
Max. output power P_o	25 mW
Safety-related maximum voltage U_m	253 V AC/DC
IIA (simple circuit): Max. external inductivity L_o / Max. external capacitance C_o	1000 mH / 210 µF
IIB/IIIC (simple circuit): Max. external inductivity L_o / Max. external capacitance C_o	1000 mH / 26 µF
IIC (simple circuit): Max. external inductivity L_o / Max. external capacitance C_o	300 mH / 3.6 µF
IIB/IIA/IIIC (mixed circuit): Max. external inductivity L_o / Max. external capacitance C_o	100 mH / 1 µF, 5 mH / 1 µF, 1 mH / 1 µF, 10 µH / 1 µF

IIC (mixed circuit): Max. external inductivity L_o / Max. external capacitance C_o	100 mH / 510 nF, 50 mH / 580 nF, 5 mH / 600 nF, 1 mH / 600 nF, 10 µH / 600 nF

Interfaces

Data

No. of channels	0

Signaling

Status display	Green LED (supply voltage)
	LED yellow (switching state)
	Red LED (line errors)

Dimensions

Dimensional drawing	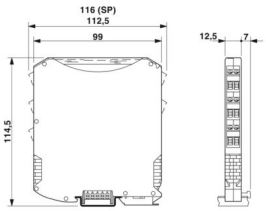
Width	12.5 mm
Height	116 mm
Depth	113.7 mm
Depth NS 35/7,5	114.5 mm (Snapped onto DIN rail NS 35/7,5 in accordance with EN 60715)

Material specifications

Color	gray (RAL 7042)
Flammability rating according to UL 94 (Housing)	V0 (Housing)
Housing material	PA 6.6-FR

Characteristics

Safety data

Safety Integrity Level (SIL)	2

Safety data

Safety Integrity Level (SIL)	2

Environmental and real-life conditions

Ambient conditions

Degree of protection	IP20 (not assessed by UL)
Ambient temperature (operation)	-20 °C ... 60 °C (Any mounting position)
Ambient temperature (storage/transport)	-40 °C ... 80 °C

Altitude	≤ 2000 m
Permissible humidity (operation)	10 % ... 95 % (non-condensing)

Approvals

CE

Certificate	CE-compliant
Note	and EN 61326

ATEX

Identification	Ⓔx II (1) G [Ex ia Ga] IIC
	Ⓔx II (1) D [Ex ia Da] IIIC
	Ⓔx II 3G Ex nA IIC T4 Gc X
Certificate	IBExU 12 ATEX 1169

IECEx

Identification	[Ex ia Ga] IIC
	[Ex ia Da] IIIC
	Ex nA IIC T4 Gc
Certificate	IECEx IBE 12.0018X

CCC / China-Ex

Identification	[Ex ia Ga] IIC
	[Ex iaD]
	Ex nA [ia Ga] IIC T4 Gc
Certificate	NEPSI GYJ20.1314X

UL, USA/Canada

Identification	UL 61010 Listed
Certificate	cULus C.D.-No 83104549

Safety Integrity Level (SIL, IEC 61508)

Identification	2

EAC Ex

Identification	EAC Ex [Ex ia Ga] IIC
	EAC Ex [Ex ia Da] IIIC
Certificate	RU C-DE.AB72.B.00093/19

INMETRO

Identification	[Ex ia Ga] IIC
	[Ex ia Da] IIIC
	Ex nA IIC T4 Gc
Certificate	DNV 18.0144 X

EMC data

Electromagnetic compatibility	Conformance with EMC directive
Noise immunity	EN 61000-6-2

Noise emission

Standards/regulations	EN 61000-6-4

Standards and regulations

Electrical isolation	3-way isolation

GB Standard

Standards/regulations	GB 3626.20
	GB 3836.1
	GB 3836.4
	GB 3836.8
	GB 12476.1
	GB 12476.4

Mounting

Mounting type	DIN rail mounting

Drawings

Dimensional drawing

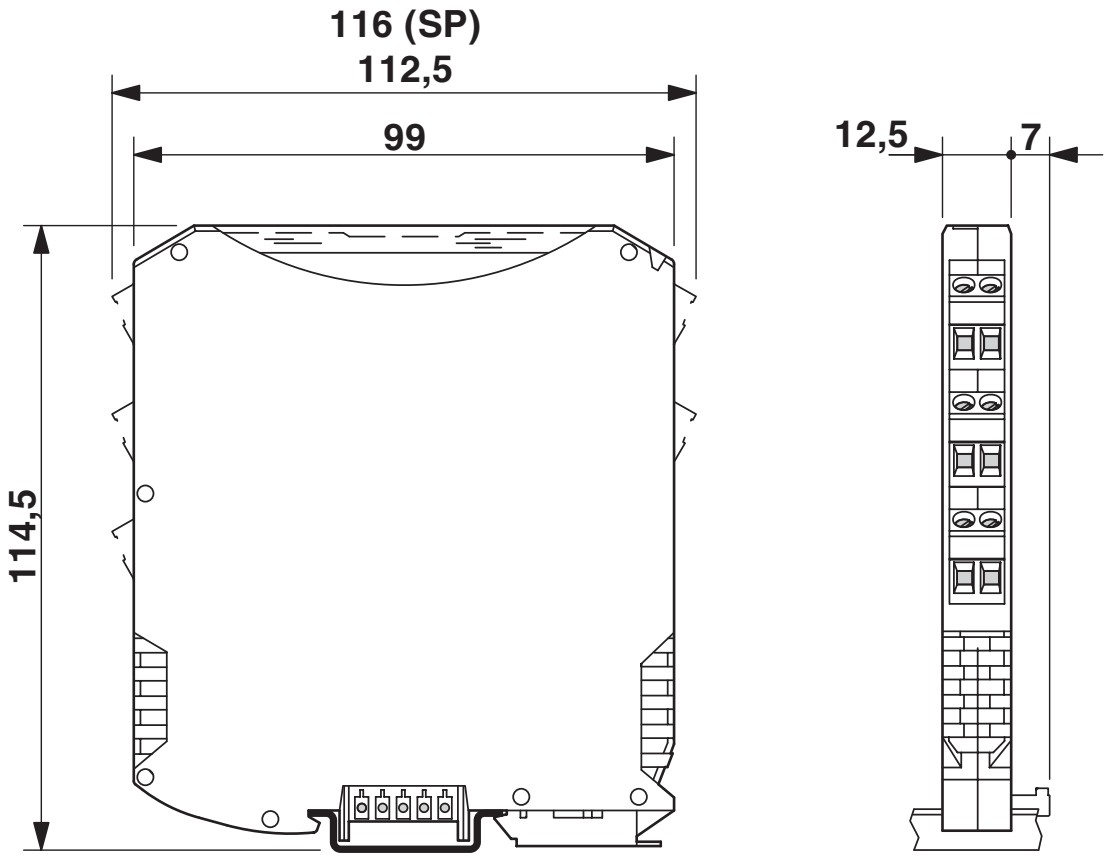

Block diagram

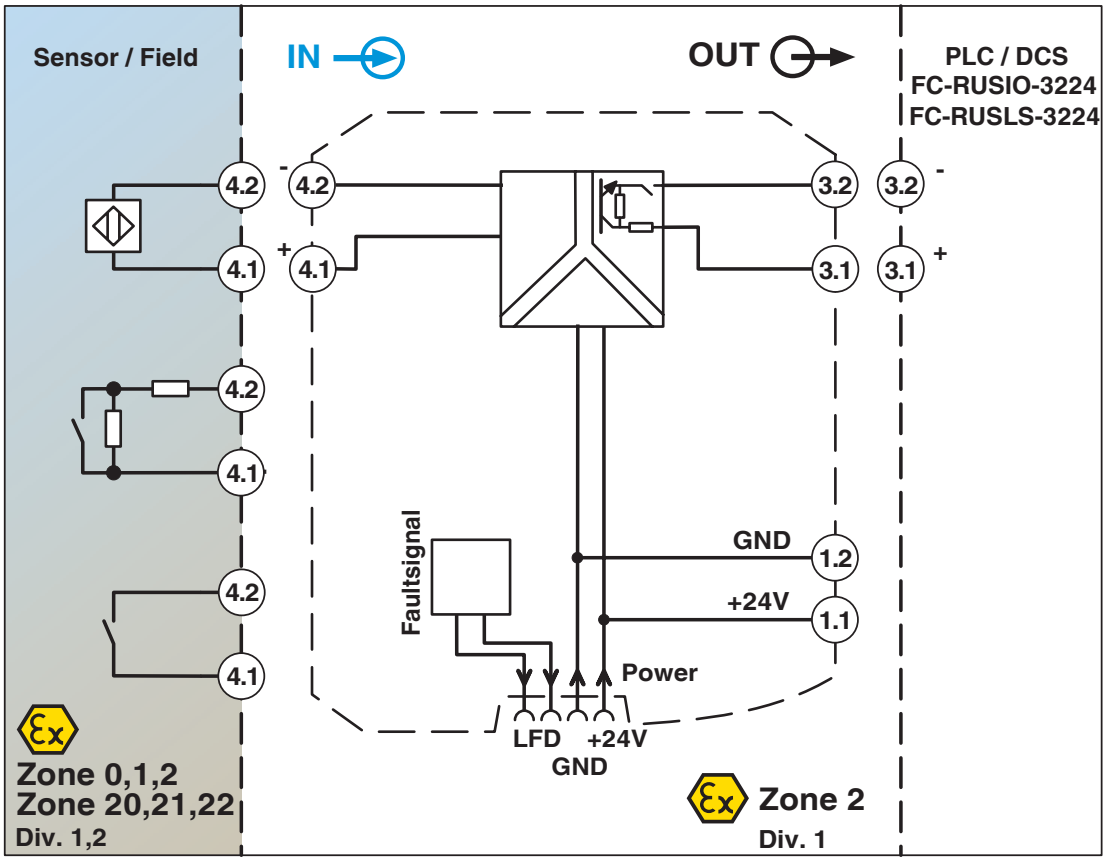

Classifications

UNSPSC

UNSPSC 21.0	39121000

Environmental product compliance

EU RoHS

Fulfills EU RoHS substance requirements	Yes
Exemption	7(a), 7(c)-I

China RoHS

Environment friendly use period (EFUP)	EFUP-50
	An article-related China RoHS declaration table can be found in the download area for the respective article under "Manufacturer declaration". For all articles with EFUP-E, no China RoHS declaration table issued and required.

EU REACH SVHC

REACH candidate substance (CAS No.)	Lead(CAS: 7439-92-1)

Phoenix Contact 2026 © - all rights reserved
https://www.phoenixcontact.com

PHOENIX CONTACT Ltd
Halesfield 13, Telford
Shropshire, TF7 4PG
01952 681700
info@phoenixcontact.co.uk