FLT-SEC-H-T1-1C-440/25-FM - Type 1+2 combined lightning current and surge arrester

2907259

https://www.phoenixcontact.com/gb/products/2907259

Please be informed that the data shown in this PDF document is generated from our online catalog. Please find the complete data in the user documentation. Our general terms of use for downloads are valid.



Plug-in lightning current arrester free of leakage current, in accordance with Type 1/Class I, with integrated surge-proof fuse, for 1-phase power supply networks with combined PE and N installed in one conductor (L1, PEN), suitable for use in the unmetered area.

Your advantages

- Surge protection family for universal use with optimum energy coordination from the lightning current arrester to the device protection
- Easy to maintain due to consistently pluggable protection modules
- Excellent level of information provided by mechanical/visual status indicator and remote indication contact
- Optimum protective effect in the event of high-energy lightning currents, thanks to spark gap technology with low residual voltage characteristic
- Integrated lightning-current-proof backup fuse for a low overall voltage protection level and space savings of up to 80% compared to an external backup fuse

Commercial data

Item number	2907259
Packing unit	1 pc
Minimum order quantity	1 pc
Sales key	CL1163
Product key	CL1163
GTIN	4055626176000
Weight per piece (including packing)	649.2 g
Weight per piece (excluding packing)	660 g
Customs tariff number	85363030
Country of origin	TR

Technical data

Product properties

Product type	Combination type
Product family	SEC Family
IEC test classification	I / II
	T1 / T2
EN type	T1 / T2
IEC power supply system	TN
	IT
Type	DIN rail module, two-section, divisible
Number of positions	1
Surge protection fault message	Optical, remote indicator contact
Number of ports	One

Insulation characteristics

Overvoltage category	III
Pollution degree	2

Electrical properties

Nominal frequency f_N	50 Hz (60 Hz)

Indicator/remote signaling

Connection name	Remote fault indicator contact
Switching function	Changeover contact
Operating voltage	12 V AC ... 250 V AC
	125 V DC (200 mA DC)
Operating current	10 mA AC ... 1 A AC
	1 A DC (30 V DC)

Connection data

Connection method	Screw connection
Screw thread	M5
Tightening torque	4.5 Nm
Stripping length	18 mm
Conductor cross-section flexible	2.5 mm² ... 35 mm²
Conductor cross-section rigid	2.5 mm² ... 35 mm²
Conductor cross-section AWG	13 ... 2
Connection method	Fork-type cable lug
Conductor cross-section flexible	1.5 mm² ... 16 mm²

Remote fault indicator contact

Connection method	Plug-in/screw connection via COMBICON

Screw thread	M2
Tightening torque	0.25 Nm
Stripping length	7 mm
Conductor cross-section flexible	0.14 mm² ... 1.5 mm²
Conductor cross-section rigid	0.14 mm² ... 1.5 mm²
Conductor cross-section AWG	28 ... 16

Dimensions

Dimensional drawing	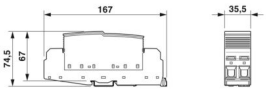
Width	35.5 mm
Height	167 mm
Depth	74.5 mm
Horizontal pitch	2 HP

Material specifications

Color (Male connector)	light gray (RAL 7035)
Color (Base element)	gray (RAL 7042)
Flammability rating according to UL 94	V-0
CTI value of material	600
Insulating material	PA 6.6-FR 20% GF
	PBT-FR
Material group	I
Housing material	PA 6.6-FR 20 % GF
	PBT-FR

Mechanical properties

Mechanical data

Open side panel	No

Protective circuit

Mode of protection	L-N
	L-PE
	L-PEN
	N-PE (4+0)
Direction of action	1L-N/PE
Nominal voltage U_N	400 V AC (TN)
	400 V AC (IT)
Nominal frequency f_N	50 Hz (60 Hz)
Maximum continuous operating voltage U_C	440 V AC

Protective conductor current I_{PE}	≤ 5 µA
Nominal discharge current I_n (8/20) µs	25 kA
Maximum discharge current I_{max} (8/20) µs	50 kA
Impulse discharge current (10/350) µs, charge	12.5 As
Impulse discharge current (10/350) µs, specific energy	160 kJ/Ω
Impulse discharge current (10/350) µs, peak value I_{imp}	25 kA
Follow current interrupt rating I_{fi}	50 kA
Short-circuit current rating I_{SCCR}	50 kA
Voltage protection level U_p	≤ 2.5 kV
Residual voltage U_{res}	≤ 2.1 kV (at I_n)
	≤ 2.8 kV (at 50 kA)
	≤ 1.7 kV (at 12.5 kA)
	≤ 1.5 kV (at 5 kA)
	≤ 1.35 kV (at 2.5 kA)
Front-of-wave sparkover voltage at 6 kV (1.2/50) µs	≤ 2.5 kV
TOV behavior at U_T	580 V AC (5 s / withstand mode)
	760 V AC (120 min / withstand mode)
	1640 V AC (200 ms / safe failure mode)
Response time t_A	≤ 100 ns

Environmental and real-life conditions

Ambient conditions

Degree of protection	IP20 (only when all terminal points are used)
Ambient temperature (operation)	-40 °C ... 80 °C
Ambient temperature (storage/transport)	-40 °C ... 80 °C
Altitude	≤ 2000 m (amsl)
Permissible humidity (operation)	5 % ... 95 %

Standards and regulations

Standards/specifications	IEC 61643-11
Note	2011

EN 61643-11

Standards/specifications	EN 61643-11
Note	2012

Mounting

Mounting type	DIN rail: 35 mm

Drawings

Dimensional drawing

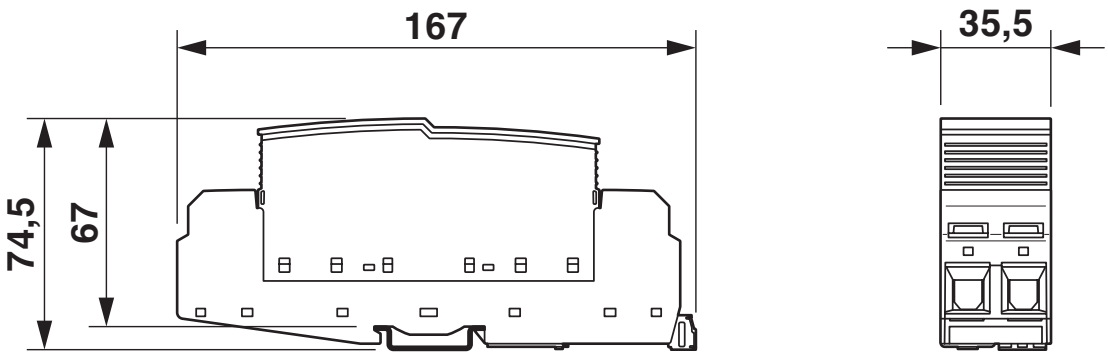

Application drawing

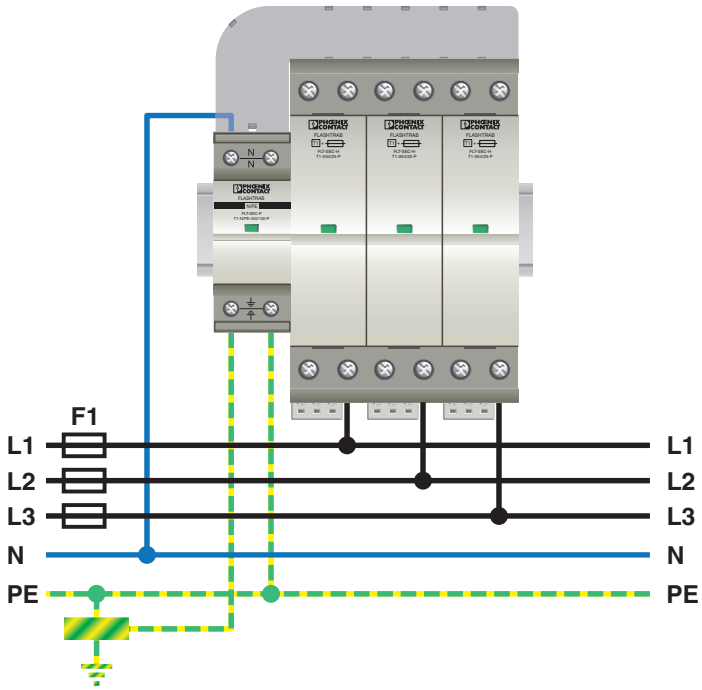

Structure of a 3+1 circuit for TN-S-/TT systems with an N/PE spark gap and wiring bridge.

Circuit diagram

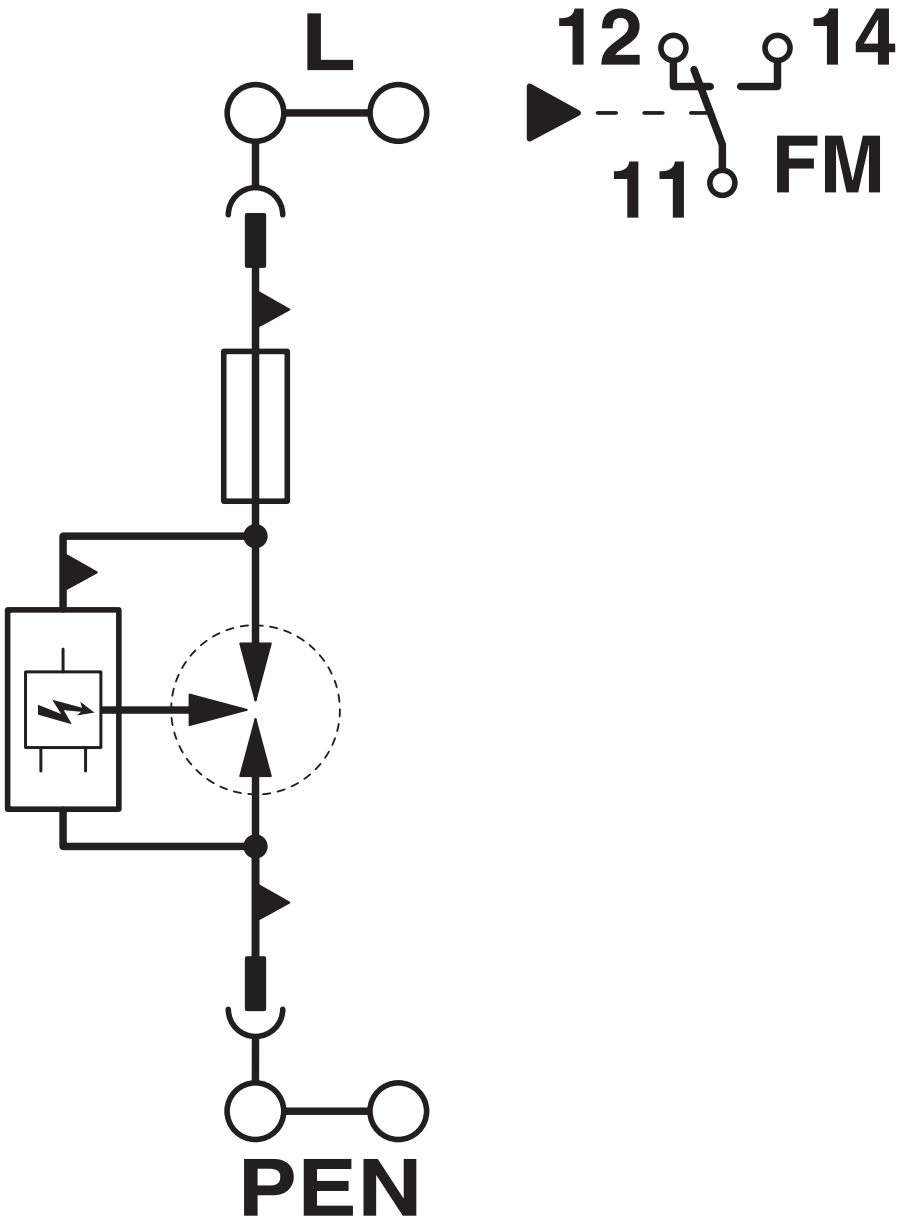

Approvals

To download certificates, visit the product detail page: https://www.phoenixcontact.com/gb/products/2907259

IECEE CB Scheme
Approval ID: NL-41433

CCA
Approval ID: NTR-NL 7490

KEMA-KEUR
Approval ID: 2188437.01

Classifications

ECLASS

ECLASS-13.0	27171201
ECLASS-15.0	27171201

ETIM

ETIM 10.0	EC000381

UNSPSC

UNSPSC 21.0	39121600

Environmental product compliance

EU RoHS

Fulfills EU RoHS substance requirements	Yes, No exemptions

China RoHS

Environment friendly use period (EFUP)	EFUP-E
	No hazardous substances above the limits

EU REACH SVHC

REACH candidate substance (CAS No.)	N,N-dimethylacetamide(CAS: 127-19-5)
SCIP	fb959e75-1acb-4ac2-9c1b-2bffe9efcb66

Phoenix Contact 2026 © - all rights reserved
https://www.phoenixcontact.com

PHOENIX CONTACT Ltd
Halesfield 13, Telford
Shropshire, TF7 4PG
01952 681700
info@phoenixcontact.co.uk