TRIO-UPS-2G/1AC/24DC/5 - Uninterruptible power supply

2907160

https://www.phoenixcontact.com/gb/products/2907160

Please be informed that the data shown in this PDF document is generated from our online catalog. Please find the complete data in the user documentation. Our general terms of use for downloads are valid.

CRA-READY



TRIO DC UPS with integrated power supply, USB (Modbus/RTU), DIN rail mounting, Push-in connection, input: 1-phase, output: 24 V DC / 5 A. The product is being prepared for compliance with the Cyber Resilience Act (CRA).

Product description

Supply DC loads reliably and save space with the TRIO uninterruptible power supplies. An input grid is no longer necessary for startup. Connected industrial PCs can be shut down easily via the integrated USB interface.

Your advantages

- Space saving: Combination of UPS module and power supply in the same housing
- Long buffer times, thanks to large selection of VRLA energy storage systems
- USB interface for connection to higher-level controllers such as industrial PCs
- Startup from the energy storage system possible, even without mains input
- Universal range of possible applications, thanks to a comprehensive package of approvals and an extended temperature range
- Easy installation, thanks to push-in connection technology

ELEKTROGERÄTE RÜCKNAHME

Commercial data

Item number	2907160

TRIO-UPS-2G/1AC/24DC/5 - Uninterruptible power supply

2907160

https://www.phoenixcontact.com/gb/products/2907160

Packing unit	1 pc
Minimum order quantity	1 pc
Sales key	CMUO13
Product key	CMUO13
GTIN	4055626166575
Weight per piece (including packing)	942 g
Weight per piece (excluding packing)	744.66 g
Customs tariff number	85044095
Country of origin	CN

Technical data

Notes

Note on application

Note on application	As things stand now, we are preparing the product so that, as of December 11, 2027, it will comply with the requirements of the EU Cyber Resilience Act (CRA) based on the information currently available regarding the CRA.

Input data

AC operation

Input voltage range	100 V AC ... 240 V AC -15 % ... +10 %
Voltage type of supply voltage	AC
Inrush current	< 16 A
Inrush current integral (I^2t)	< 0.43 A^2s
Frequency range (f_N)	50 Hz ... 60 Hz (±10 %)
Mains buffering time	≥ 15 ms (120 V AC)
Switch-on time	typ. 60 ms
Typical current consumption	3.3 A (100 V AC)
Input fuse	6.3 A (slow-blow, internal)

DC operation

Input voltage range	110 V DC ... 250 V DC
Voltage type of supply voltage	DC
Typical current consumption	1.8 A (110 V DC)

Output data

Efficiency	typ. 85 % (120 V AC)
	typ. 87 % (230 V AC)
	typ. 96 % (Battery operation)
Derating	> 60 °C (2.5%/K of P_{Out} nom.)
Crest factor	2.7 (120 V AC)
	3.2 (230 V AC)
Switch-over time	< 75 ms
UPS connection in parallel	yes, with diode module uncoupled
UPS connection in series	no
Energy storage device connection in parallel	yes
Feedback voltage resistance	≤ 35 V DC
Protection against overvoltage at the output (OVP)	< 30 V DC
Residual ripple	< 20 mV
Control deviation	< 0.75 % (change in load, static 10 % ... 90 %)
	< 1.25 % (Dynamic load change 10 % ... 90 %, 10 Hz)
	< 0.1 % (change in input voltage ±10 %)
Rise time	< 15 ms

Permissible backup fuse	B10

Mains operation

Output voltage	24 V DC
Output voltage range	24 V DC ... 28 V DC (> 24 V constant capacity)
Output current I_N	5 A
Dynamic BOOST ($I_{Dyn.Boost}$)	7.5 A
Output power P_{OUT} (U_N, $I_{OUT} = I_N$)	120 W
Maximum no-load power dissipation	< 3 W (230 V AC)
Power loss nominal load max.	< 19 W (230 V AC)

Battery operation

Output voltage	U_{BAT} -0.1 V DC
Output voltage range	18 V DC ... 30 V DC
Output current I_N	5 A
Dynamic BOOST ($I_{Dyn.Boost}$)	7.5 A

Energy storage

Nominal voltage U_N	24 V DC
End-of-charge voltage	max. 30 V DC
Charging current (Configurable)	0.2 A ... 1.5 A (-25 °C ... 40 °C)
Charging current (Reduced)	1.5 A ... 0 A (40 °C ... 65 °C)
Charging current (Preset)	1.2 A (-25 °C ... 40 °C)
Charging current (max.)	1.5 A
Nominal capacity range	1.2 Ah ... 12 Ah
Battery technology	VRLA-AGM
Charge characteristic curve	IU_0U

Connection data

Conductor connection

Connection method	Push-in connection
rigid	0.2 mm² ... 4 mm²
flexible	0.2 mm² ... 2.5 mm²
flexible with ferrule without plastic sleeve	0.25 mm² ... 2.5 mm²
flexible with ferrule with plastic sleeve	0.25 mm² ... 1.5 mm²
AWG	24 ... 12
Stripping length	10 mm

Conductor connection

Connection method	Push-in connection
rigid	0.2 mm² ... 4 mm²
flexible	0.2 mm² ... 2.5 mm²
flexible with ferrule without plastic sleeve	0.25 mm² ... 2.5 mm²
flexible with ferrule with plastic sleeve	0.25 mm² ... 1.5 mm²
AWG	24 ... 12

Stripping length	10 mm

Conductor connection

Connection method	Push-in connection
rigid	0.2 mm² ... 1.5 mm²
flexible	0.2 mm² ... 1.5 mm²
flexible with ferrule without plastic sleeve	0.2 mm² ... 1.5 mm²
flexible with ferrule with plastic sleeve	0.2 mm² ... 0.75 mm²
AWG	24 ... 16
Stripping length	8 mm

Conductor connection

Connection method	Push-in connection
rigid	0.2 mm² ... 10 mm²
flexible	0.2 mm² ... 6 mm²
flexible with ferrule without plastic sleeve	0.25 mm² ... 6 mm²
flexible with ferrule with plastic sleeve	0.25 mm² ... 4 mm²
AWG	24 ... 8
Stripping length	15 mm

Interfaces

Interface	USB (Modbus/RTU)
Number of interfaces	1
Connection method	MINI-USB Type B
Locking	Screw

Signaling

Signal input Remote

Connection labeling	3.5
Signalization designation	Remote
Low signal	Connection to SGnd with < 2.7 kΩ
High signal	Open (> 35 kΩ between Remote and SGnd)

Signal input Bat.-Start

Connection labeling	3.6
Signalization designation	Bat.-Start
Low signal	Connection to SGnd with < 2.7 kΩ
High signal	Open (> 200 kΩ between Bat.-Start and SGnd)

Signal output DC OK

Connection labeling	3.1
Signalization designation	DC OK
Type of signaling	Green LED
Switching output	Transistor output, active
Output voltage	24 V DC

Continuous load current	20 mA
LED status indicator	green

Signal output Alarm

Connection labeling	3.2
Signalization designation	Alarm
Type of signaling	LED red
Switching output	Transistor output, active
Output voltage	24 V DC
Continuous load current	20 mA
LED status indicator	red

Signal output Battery Mode

Connection labeling	3.3
Signalization designation	Battery mode
Type of signaling	Yellow LED
Switching output	Transistor output, active
Output voltage	24 V DC
Continuous load current	20 mA
LED status indicator	yellow

Signal output Ready

Connection labeling	3.4
Signalization designation	Ready
Switching output	Transistor output, active
Output voltage	24 V DC
Continuous load current	20 mA

Signal output 24V DC 20 mA, SGnd

Connection labeling	3.7

Electrical properties

Number of phases	1
Insulation voltage input/output	3 kV AC (type test)
	1.5 kV AC (routine test)
Insulation voltage output / PE	500 V AC (type test)
	500 V AC (routine test)
Insulation voltage input / PE	1.5 kV AC (type test)
	1.5 kV AC (routine test)

Product properties

Product type	DC UPS with integrated power supply
Product family	TRIO DC UPS with integrated power supply
MTBF (IEC 61709, SN 29500)	> 1395470 h (230 V AC, at 25 °C)
	> 825726 h (230 V AC, at 40 °C)
	> 388314 h (230 V AC, at 60 °C)

Special properties	The product is being prepared for compliance with the Cyber Resilience Act (CRA)

Insulation characteristics

Protection class	I
Overvoltage category (EN 61010-1)	II
Degree of pollution	2

Life expectancy (electrolytic capacitors)

Current	5 A
Temperature	40 °C
Additional text	230 V AC

Dimensions

Item dimensions

Width	60 mm
Height	130 mm
Depth	115 mm

Installation dimensions

Installation distance right/left	0 mm / 0 mm
Installation distance top/bottom	50 mm / 50 mm

Mounting

Mounting type	DIN rail mounting
Assembly note	alignable: horizontally 0 mm, vertically 50 mm
Mounting position	horizontal DIN rail NS 35, EN 60715

Material specifications

Flammability rating according to UL 94 (housing / terminal blocks)	V0
Housing material	Metal
Hood version	PC
Side element version	Aluminum

Environmental and real-life conditions

Ambient conditions

Degree of protection	IP20
Ambient temperature (operation)	-25 °C ... 70 °C (> 60 °C Derating: 2,5 %/K)
Ambient temperature (storage/transport)	-40 °C ... 85 °C
Ambient temperature (start-up type tested)	-40 °C
Maximum altitude	≤ 4000 m (> 2000 m, observe derating)
Climatic class	3K3 (in acc. with EN 60721)
Max. permissible relative humidity (operation)	≤ 95 % (at +25 °C, non-condensing)
Shock	30g, 18 ms in accordance with IEC 60068-2-27

Vibration (operation)	< 12 ... 13.2 Hz, amplitude ±1 mm, 13.2 ... 100 Hz, 0.7g in accordance with IEC 60068-2-6

Standards and regulations

Safety for measurement, control, and laboratory equipment

Standard designation	Safety for equipment for measurement, control, and laboratory use
Standards/specifications	IEC 61010-1

Safety extra-low voltage

Standard designation	Safety extra-low voltage
Standards/specifications	IEC 61010-1 (SELV)

Protective extra-low voltage

Standard designation	Protective extra-low voltage
Standards/specifications	IEC 61010-2-201 (PELV)

Safe isolation

Standard designation	Safe isolation
Standards/specifications	DIN VDE 0100-410

Low-voltage power supplies, DC output

Standard designation	Low-voltage power supplies, DC output
Standards/specifications	EN 61204-3

Ship’s bridge

Standard designation	Ship’s bridge
Standards/specifications	IEC/EN 60945

Approvals

UL

Identification	UL Listed UL 61010

UL

Identification	UL/C-UL Listed ANSI/ISA-12.12.01 Class I, Division 2, Groups A, B, C

Shipbuilding

Identification	DNV

Shipbuilding

Identification	LR

EMC data

Electromagnetic compatibility	Conformance with EMC Directive 2014/30/EU
Low Voltage Directive	Conformance with Low Voltage Directive 2014/35/EC
EMC requirements for noise emission	EN 61000-6-3
	EN 61000-6-4

EMC requirements for noise immunity	EN 61000-6-1
	EN 61000-6-2
Noise immunity	Immunity in accordance with EN 61000-6-2 (industrial)

Conducted noise emission

Standards/regulations	EN 61000-6-3

Noise emission

Standards/regulations	EN 61000-6-3

DNV GL conducted noise emissions

DNV	Class B
Additional text	Area power distribution

DNV GL noise radiation

DNV	Class B
Additional text	Bridge and deck area

Harmonic currents

Standards/regulations	EN 61000-3-2

Flicker

Standards/regulations	EN 61000-3-3

Electrostatic discharge

Standards/regulations	EN 61000-4-2

Electrostatic discharge

Contact discharge	6 kV (Test Level 3)
Discharge in air	8 kV (Test Level 3)

Electromagnetic HF field

Standards/regulations	EN 61000-4-3

Electromagnetic HF field

Frequency range	80 MHz ... 6 GHz
Test field strength	10 V/m
Frequency range	1.4 GHz ... 6 GHz
Test field strength	3 V/m

Fast transients (burst)

Standards/regulations	EN 61000-4-4

Fast transients (burst)

Input	4 kV
Output	2 kV
Signal	2 kV

Surge voltage load (surge)

Standards/regulations	EN 61000-4-5

Surge voltage load (surge)

Input	2 kV (Test Level 4 - symmetrical)
	4 kV (Test Level 4 - asymmetrical)
Output	1 kV (Test Level 3 - symmetrical)
	2 kV (Test Level 3 - asymmetrical)
Signal	1 kV (Test Level 2 - asymmetrical)

Conducted interference

Standards/regulations	EN 61000-4-6

Conducted interference

Frequency range	0.15 MHz ... 80 MHz
Voltage	10 V

Drawings

Schematic diagram

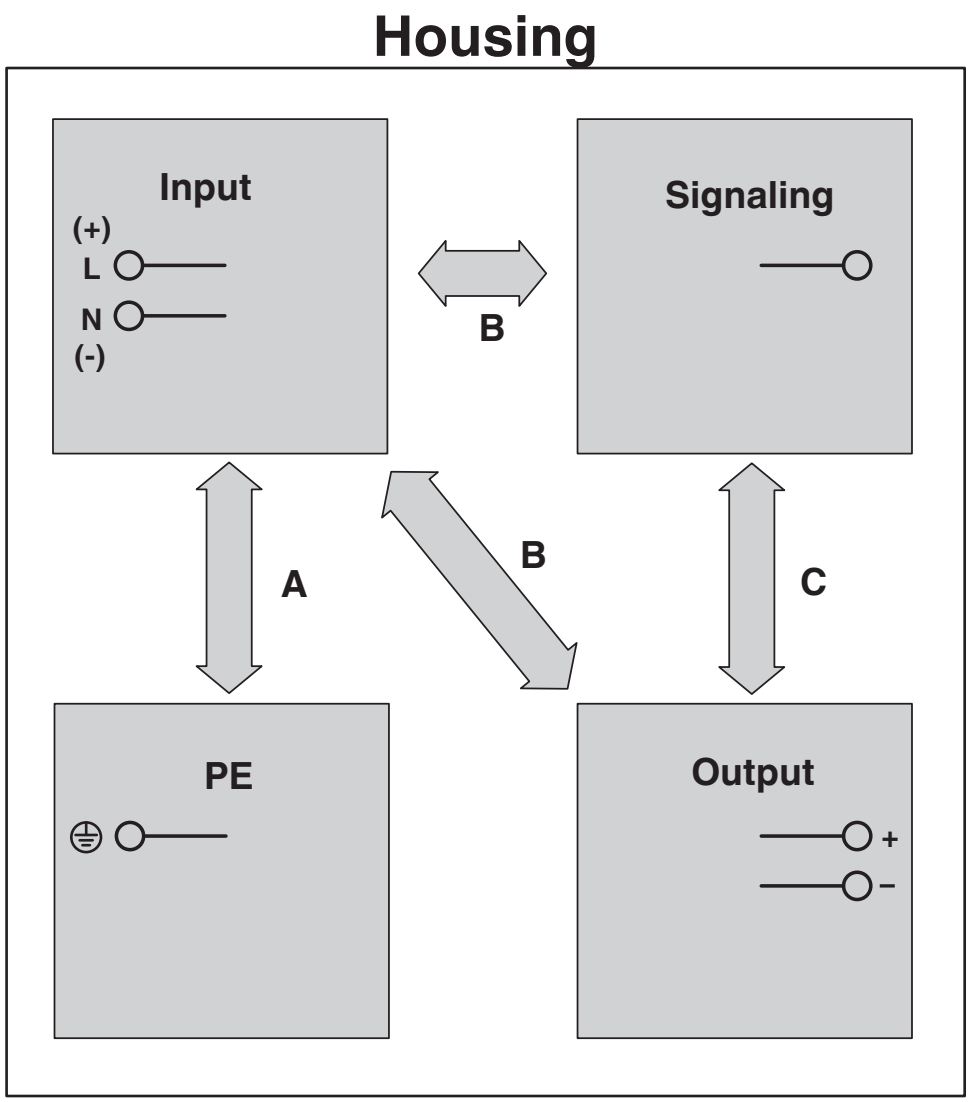

Insulation electric strength

Block diagram

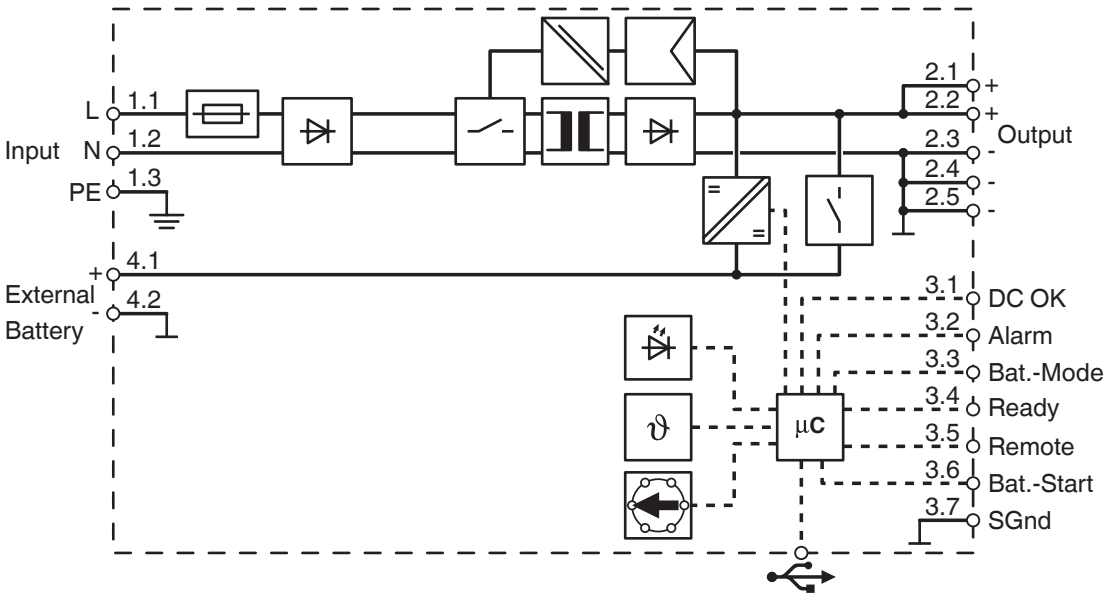

Block diagram

Graphic

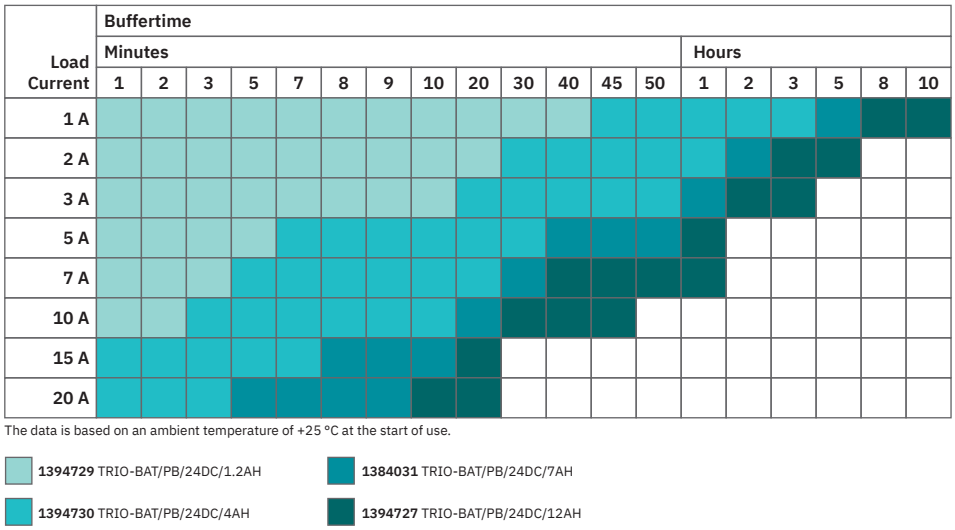

TRIO-UPS-2G buffer times for TRIO battery modules

Graphic

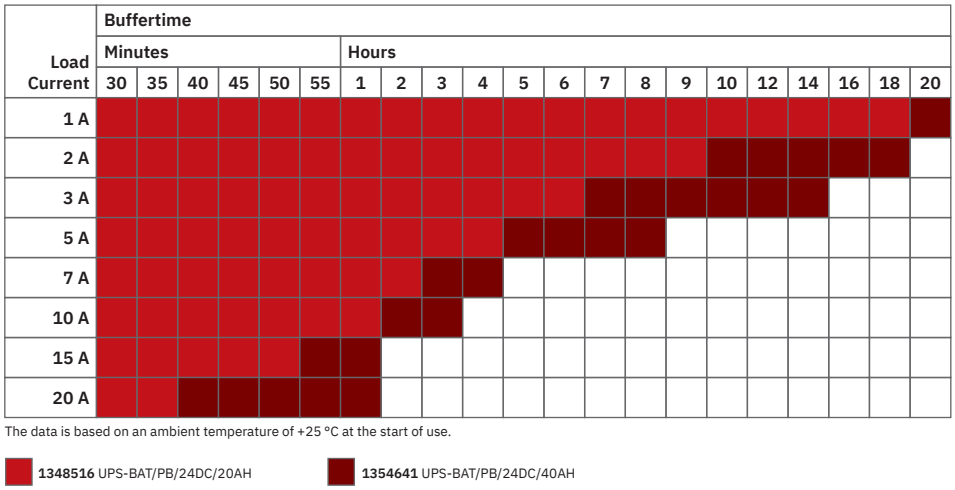

The data is based on an ambient temperature of +25 °C at the start of use.

1348516 UPS-BAT/PB/24DC/20AH **1354641** UPS-BAT/PB/24DC/40AH

TRIO-UPS-2G buffer times for lead battery modules

Graphic

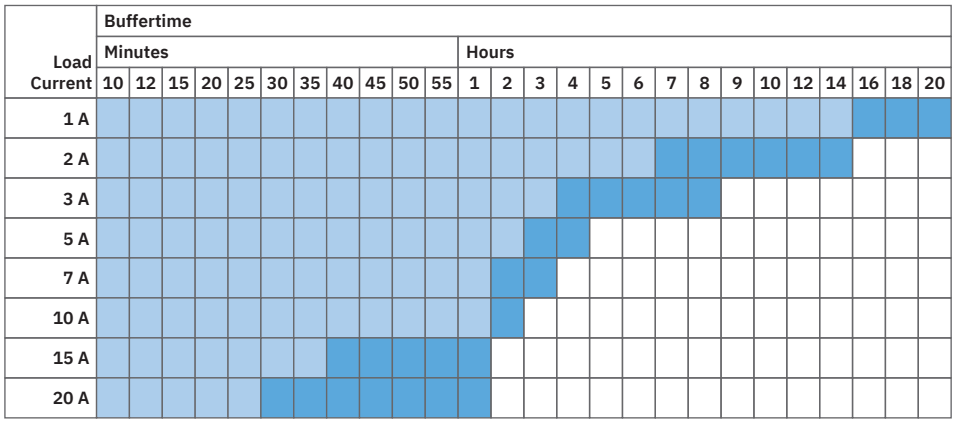

The data is based on an ambient temperature of +25 °C at the start of use.

2320416 UPS-BAT/VRLA-WTR/24DC/13AH **2320429** UPS-BAT/VRLA-WTR/24DC/26AH

TRIO-UPS-2G buffer times for VRLA-WTR battery modules

Approvals

To download certificates, visit the product detail page: https://www.phoenixcontact.com/gb/products/2907160

DNV
Approval ID: TAA00000BM

IECEE CB Scheme
Approval ID: DK-63811-UL

EAC
Approval ID: RU S-DE.BL08.W.00764

LR
Approval ID: LR21417906TA-01

EAC
Approval ID: RU S-DE.BL08.W.00764

UL Listed
Approval ID: E123528

cUL Listed
Approval ID: E123528

BSH
Approval ID: 1025a

KC
Approval ID: R-R-PCK-2907160

IECEE CB Scheme
Approval ID: DK-63811-UL

cUL Listed
Approval ID: E123528

UL Listed
Approval ID: E123528

BSH
Approval ID: 1025a

LR
Approval ID: LR21417906TA-01

EAC
Approval ID: RU-DE.B.00184/20

EAC
Approval ID: RU-DE.B.00184/20

KC
Approval ID: R-R-PCK-2907160

DNV
Approval ID: TAA00000BM

NK
Approval ID: TA26283M

NK
Approval ID: TA26283M

cUL Listed
Approval ID: E199827

UL Listed
Approval ID: E199827

UL Listed
Approval ID: E199827

cUL Listed
Approval ID: E199827

Classifications

ECLASS

ECLASS-13.0	27040705
ECLASS-15.0	27040705

ETIM

ETIM 10.0	EC000382

UNSPSC

UNSPSC 21.0	39121000

Environmental product compliance

EU RoHS

Fulfills EU RoHS substance requirements	Yes
Exemption	7(a), 7(c)-I

China RoHS

Environment friendly use period (EFUP)	EFUP-25
	An article-related China RoHS declaration table can be found in the download area for the respective article under "Manufacturer declaration". For all articles with EFUP-E, no China RoHS declaration table issued and required.

EU REACH SVHC

REACH candidate substance (CAS No.)	Lead(CAS: 7439-92-1)
SCIP	e77ad9e2-2404-4b0a-ba31-f740fa6d007a

EF3.1 Climate Change

CO2e kg	22.38 kg CO2e

Phoenix Contact 2026 © - all rights reserved
https://www.phoenixcontact.com

PHOENIX CONTACT Ltd
Halesfield 13, Telford
Shropshire, TF7 4PG
01952 681700
info@phoenixcontact.co.uk