PLC-ASC-UI-IN - Analog module

2906916

https://www.phoenixcontact.com/gb/products/2906916

Please be informed that the data shown in this PDF document is generated from our online catalog. Please find the complete data in the user documentation. Our general terms of use for downloads are valid.

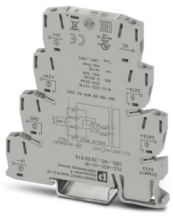

Analog input module for PLC logic logic modules (Generation 2 only), single-channel, signal type (4 mA ... 20 mA, 0 mA ... 20 mA, 0 V ... 10 V, 2 V ... 10 V) can be configured via DIP switch, screw connection

Commercial data

Item number	2906916
Packing unit	1 pc
Minimum order quantity	1 pc
Sales key	DK2622
Product key	DK2622
GTIN	4055626153773
Weight per piece (including packing)	79.9 g
Weight per piece (excluding packing)	53.3 g
Customs tariff number	85389099
Country of origin	DE

Technical data

Notes

Notes on operation	For proper use, the specifications of the installation directive (see Downloads) must be observed. For applications or use with third-party products, the specifications, and the safety and warning instructions of the respective third-party manufacturer must also be met.

Product properties

Product type	Extension module
Product family	PLC logic
Operating mode	100% operating factor

Insulation characteristics: Air clearances and creepage distances

Insulation	Basic insulation
Overvoltage category	III
Pollution degree	2

Electrical properties

Air clearances and creepage distances

Rated insulation voltage	50 V
Rated surge voltage	0.5 kV

Supply

Rated control circuit supply voltage U_S	24 V DC
Rated control supply voltage range with reference to U_S	0.8 ... 1.1
Rated control supply current I_S	13 mA
Protective circuit	Reverse polarity protection
	Surge protection

Input data

Analog current input

Number of inputs	1
Current input signal	0 mA ... 20 mA
	4 mA ... 20 mA
Input resistance current input	40 Ω
Maximum temperature coefficient	0.01 %/K
Maximum transmission error	1 %
Surge voltage protection	> 33 V
Resolution	10 bit (scaled to 0 to 1000)

Analog voltage input

Number of inputs	1
Voltage input signal	0 V ... 10 V

	2 V ... 10 V
Input resistance of voltage input	> 120 kΩ
Maximum temperature coefficient	0.01 %/K
Maximum transmission error	1 %
Surge voltage protection	> 33 V
Resolution	10 bit (scaled to 0 to 1000)

Output data

Digital

Output name	Digital output
Switching voltage range	5 V DC ... 30 V DC
Switching current	≤ 3 mA

Connection data

Connection method	Screw connection
Stripping length	8 mm
Screw thread	M3
Conductor cross-section rigid	0.14 mm² ... 2.5 mm²
Conductor cross-section flexible	0.14 mm² ... 2.5 mm²
	0.2 mm² ... 2.5 mm² (Single ferrule)
	2x 0.5 mm² ... 1.5 mm² (TWIN ferrule)
Conductor cross-section AWG	26 ... 14
Tightening torque	0.45 Nm ... 0.55 Nm (Usually these terminal blocks must be supported during conductor connection (held by one hand, supported on the housing))

Signaling

Operating voltage display	Green LED
Error indication	Red LED

Dimensions

Width	6.2 mm
Height	80 mm
Depth	94 mm

Material specifications

Color	gray (RAL 7042)

Environmental and real-life conditions

Ambient conditions

Degree of protection	IP20
Ambient temperature (operation)	-20 °C ... 50 °C
Ambient temperature (storage/transport)	-20 °C ... 70 °C

Approvals

CE

Certificate	CE-compliant

UL, USA/Canada

Identification	UL 508 Listed

Standards and regulations

Air clearances and creepage distances

Standards/regulations	DIN EN 50178

Mounting

Mounting type	DIN rail mounting
Assembly note	in rows with zero spacing
Mounting position	any

Drawings

Block diagram

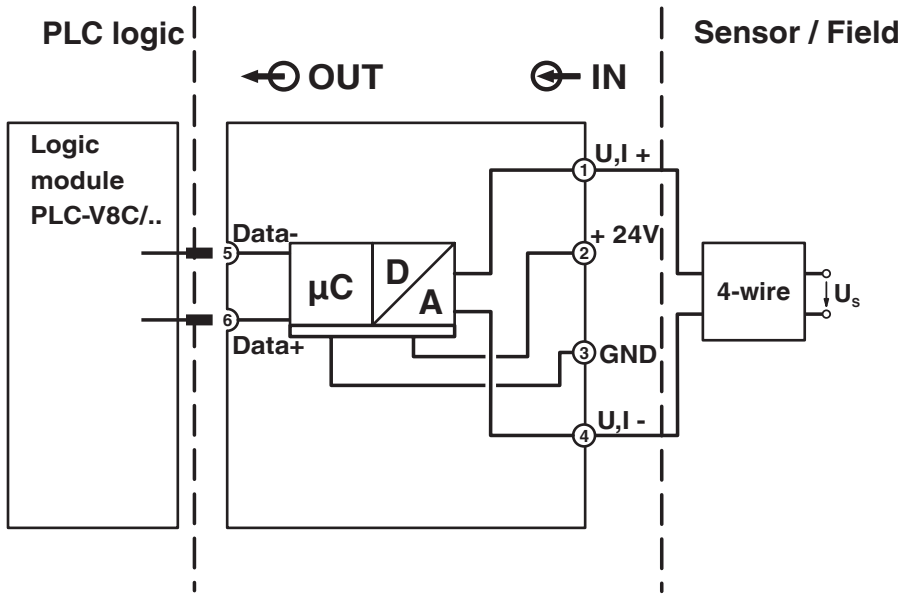

Classifications

ECLASS

ECLASS-13.0	27242201

ETIM

ETIM 9.0	EC001420

UNSPSC

UNSPSC 21.0	32151600

Environmental product compliance

EU RoHS

Fulfills EU RoHS substance requirements	Yes
Exemption	7(a), 7(c)-I

China RoHS

Environment friendly use period (EFUP)	EFUP-50
	An article-related China RoHS declaration table can be found in the download area for the respective article under "Manufacturer declaration". For all articles with EFUP-E, no China RoHS declaration table issued and required.

EU REACH SVHC

REACH candidate substance (CAS No.)	Lead(CAS: 7439-92-1)
	2,2',6,6'-tetrabromo-4,4'-isopropylidenediphenol(CAS: 79-94-7)
SCIP	356039f4-8baa-403f-8a7e-6124298f0736

Phoenix Contact 2026 © - all rights reserved
https://www.phoenixcontact.com

PHOENIX CONTACT Ltd
Halesfield 13, Telford
Shropshire, TF7 4PG
01952 681700
info@phoenixcontact.co.uk