TRIO-UPS-2G/1AC/1AC/230V/750VA - Uninterruptible power supply

2905909

https://www.phoenixcontact.com/gb/products/2905909

Please be informed that the data shown in this PDF document is generated from our online catalog. Please find the complete data in the user documentation. Our general terms of use for downloads are valid.

CRA-READY



1AC/1AC/750 VA uninterruptible power supply with integrated battery, lead AGM, VRLA technology, 24 V DC, 4 Ah for 230 V AC applications. Product is being prepared for compliance with the Cyber Resilience Act (CRA).

Product description

UPS modules with integrated battery are particularly space-saving: the UPS module and battery are combined in one housing. The TRIO AC UPS ensures seamless transition to battery operation thanks to the pure sine curve. Connected industrial PCs can be shut down safely via the integrated USB interface.

Your advantages

- Smooth transition, thanks to the pure sine curve: the sine generated in battery operation is synchronous with the mains previously used for supply
- Space saving: Combination of UPS module and battery in the same housing
- Long buffer times with integrated VRLA battery, can be extended with additional battery module
- USB interface for connection to higher-level controllers such as industrial PCs
- Startup from the energy storage system possible, even without mains input

ELEKTROGERÄTE RÜCKNAHME

Commercial data

TRIO-UPS-2G/1AC/1AC/230V/750VA - Uninterruptible power supply

2905909

https://www.phoenixcontact.com/gb/products/2905909

Item number	2905909
Packing unit	1 pc
Minimum order quantity	1 pc
Sales key	CMUO15
Product key	CMUO15
GTIN	4055626007502
Weight per piece (including packing)	6,367 g
Weight per piece (excluding packing)	6,009 g
Customs tariff number	85371091
Country of origin	DE

Technical data

Notes

Note on application

Note on application	As things stand now, we are preparing the product so that, as of December 11, 2027, it will comply with the requirements of the EU Cyber Resilience Act (CRA) based on the information currently available regarding the CRA.

General

Note on the battery	This product contains a battery with a limited shelf life that must be charged every few months. The product packaging indicates when the battery must be started up or recharged. The general shelf life can be found in the energy storage devices area under “Latest startup”.

Input data

AC operation

Input voltage	230 V AC
Input voltage range	184 V AC ... 264 V AC
Voltage type of supply voltage	AC
Frequency range (f_N)	45 Hz ... 55 Hz
	55 Hz ... 65 Hz
Current consumption	3 A (max.)
Power factor	0.8
Input fuse	10 A 400 V gRL
Permissible backup fuse	B6 B10 B16

Digital Control (configurable)

Designation	Remote
Low signal	Connection to SGnd with < 2.7 kΩ
High signal	Open (> 35 kΩ between Remote and SGnd)

Digital Control Low-Active (configurable)

Battery-operated start 230 V AC low signal	Connection to SGnd with < 2.7 kΩ
Battery-operated start 230 V AC high signal	Open (> 200 kΩ between Bat.-Start and SGnd)

Output data

Classification according to IEC 62040-3	VFD-SS-311
Efficiency	> 95 % (100% load, with charged battery)
	~ 81 % (100 % load)
Nominal output voltage	230 V AC
Form of output voltage	Pure sine
Nominal output current (I_N)	3 A

Bridging time	60 s
UPS connection in parallel	no
UPS connection in series	no
Apparent power	750 VA
Nominal power	600 W (Real power)
Crest factor	2.8
Switch-over time	< 10 ms
Connection in parallel	no
Connection in series	no

Mains operation

Nominal output voltage	230 V AC
Nominal output current (I_N)	3 A (750 VA)

Battery operation

Nominal output voltage	230 V AC
Nominal output current (I_N)	3 A (750 VA)
Frequency (after automatic detection in mains operation)	50 Hz
	60 Hz

Signal: Alarm

Output voltage	24 V (SELV)
Continuous load current	≤ 20 mA

Signal: Battery mode

Output voltage	24 V (SELV)
Continuous load current	≤ 20 mA

Signal: Ready

Output voltage	24 V (SELV)
Continuous load current	≤ 20 mA

Signal: AC OK, P > P_n, Remote

Signal ground SGnd	Reference potential for Bat.-Mode, Ready, Remote, and Bat.-Start

Energy storage

Nominal voltage U_N	24 V DC
Charging current	0.7 A ... 1.1 A
Nominal capacity	4 Ah
Nominal capacity range	4 Ah
Charging time	7 h
Buffer period	20 min (100 W)
	4 min (300 W)
	1 min (600 W)
Latest startup date (battery only)	6 Months (0 °C ... 20 °C)

Latest startup (battery only) - range	6 Months ... 3 Months (20 °C ... 30 °C)
	3 Months ... 1 Months (30 °C ... 40 °C)
Battery technology	Lead rechargeable battery module
Memory medium	Lead rechargeable battery module
Accumulator type	2x Panasonic UP-VW1220P1 / BB Battery HR4.2-12FR
Can be extended with external battery	1x 24 V 4 Ah
Battery fuse	40 A, 32 V

Connection data

Input

Connection method	Push-in connection
Conductor cross-section, rigid min.	0.2 mm²
Conductor cross-section, rigid max.	4 mm²
Conductor cross-section flexible min.	0.2 mm²
Conductor cross-section flexible max.	2.5 mm²
Conductor cross-section AWG min.	24
Conductor cross-section AWG max.	12
Stripping length	10 mm

Output

Connection method	Push-in connection
Conductor cross-section, rigid min.	0.2 mm²
Conductor cross-section, rigid max.	4 mm²
Conductor cross-section flexible min.	0.2 mm²
Conductor cross-section flexible max.	2.5 mm²
Conductor cross-section AWG min.	24
Conductor cross-section AWG max.	12
Stripping length	10 mm

Signal

Connection method	Push-in connection
Conductor cross-section, rigid min.	0.2 mm²
Conductor cross-section, rigid max.	1.5 mm²
Conductor cross-section flexible min.	0.2 mm²
Conductor cross-section flexible max.	1.5 mm²
Conductor cross-section AWG min.	24
Conductor cross-section AWG max.	16
Stripping length	8 mm

Signal

Connection method	Push-in connection
Conductor cross-section, rigid min.	0.2 mm²
Conductor cross-section, rigid max.	1.5 mm²

Conductor cross-section flexible min.	0.2 mm²
Conductor cross-section flexible max.	1.5 mm²
Conductor cross-section AWG min.	24
Conductor cross-section AWG max.	16
Stripping length	8 mm

Interfaces

Interface	MINI-USB type B
Maximum cable length	3 m

Signaling

Types of signaling	LED

Signal output: Transistor output, active

Signalization designation	Alarm
Status display	LED
Color	red

Signal output: Transistor output, active

Signalization designation	Battery mode
Status display	LED
Color	yellow

Signal output: Transistor output, active

Signalization designation	Ready

Signal output

Signalization designation	AC OK, P > P_n, Remote
Status display	LED
Color	green

Signal output

Signalization designation	Battery charge
Status display	LED
Color	yellow

Signal output

Signalization designation	Service
Status display	LED
Color	red

Electrical properties

Number of phases	1

Product properties

Product type	AC UPS

Product family	TRIO AC UPS – UPS with integrated battery
MTBF (IEC 61709, SN 29500)	> 206000 h (40 °C)

Insulation characteristics

Protection class	I
Overvoltage category	III
Degree of pollution	2

Life expectancy (electrolytic capacitors)

Time	32000 h

Dimensions

Width	210 mm
Height	170 mm
Depth	136 mm

Installation dimensions

Installation distance right/left	0 mm / 0 mm
Installation distance top/bottom	50 mm / 50 mm

Mounting

Mounting type	DIN rail mounting

Material specifications

Type of housing	DX51D+AZ (steel sheet / Galvalume)
Hood version	PC + ABS

Environmental and real-life conditions

Ambient conditions

Degree of protection	IP20
Ambient temperature (operation)	0 °C ... 40 °C
Ambient temperature (storage/transport)	-15 °C ... 40 °C (with charged energy storage device)
Maximum altitude	≤ 3000 m (> 2000 m, observe derating)
Climatic class	3K3 (in acc. with EN 60721)
Max. permissible relative humidity (operation)	≤ 95 % (25 °C, non-condensing)
Shock	20g in all directions (EN 60068-2-27)
	30g in each space direction with UWA 130
Vibration (operation)	5 Hz ... 100 Hz, 0.7g (EN 60068-2-6)

Standards and regulations

Standards

Standard uninterruptible power supply systems	EN 62040-1

EMC data

Electromagnetic compatibility	Conformance with EMC Directive 2014/30/EU
Low Voltage Directive	Conformance with Low Voltage Directive 2014/35/EC
Interference emission	Noise emission in accordance with EN 62040-2
Noise immunity	Immunity in accordance with EN 62040-2

Electrostatic discharge

Standards/regulations	EN 61000-4-2

Electrostatic discharge

Contact discharge	6 kV (Test Level 3)
Discharge in air	8 kV (Test Level 3)
Comments	Criterion A

Electromagnetic HF field

Standards/regulations	EN 61000-4-3

Electromagnetic HF field

Frequency range	80 MHz ... 3 GHz
Test field strength	10 V/m
Comments	Criterion A

Fast transients (burst)

Standards/regulations	EN 61000-4-4

Fast transients (burst)

Input	2 kV (Test Level 3 - asymmetrical)
	2 kV (Test Level 3 - asymmetrical)
Output	2 kV (Test Level 3 - asymmetrical)
Signal	2 kV (Test Level 3 - asymmetrical)
	2 kV (Test Level 3 - asymmetrical)
Comments	Criterion A (B for USB)

Surge voltage load (surge)

Standards/regulations	EN 61000-4-5

Surge voltage load (surge)

Input	1 kV (Test Level 2 - symmetrical)
	2 kV (Test Level 3 - asymmetrical)
Output	1 kV (Test Level 2 - symmetrical)
	2 kV (Test Level 3 - asymmetrical)
Signal	1 kV (Test Level 2 - asymmetrical)
Comments	Criterion A

Conducted interference

Standards/regulations	EN 61000-4-6

Conducted interference

Frequency range	0.15 MHz ... 80 MHz
Comments	Criterion A
Voltage	10 V

Power frequency magnetic field

Standards/regulations	EN 61000-4-8
Frequency	50 Hz
Test field strength	100 A/m
Comments	Criterion A

Emitted interference

Emitted radio interference in acc. with EN 55011	EN 55011 (EN 55022) Class B, area of application: Industry and residential

Criteria

Criterion A	Normal operating behavior within the specified limits.
Criterion B	Temporary impairment to operational behavior that is corrected by the device itself.

Drawings

Block diagram

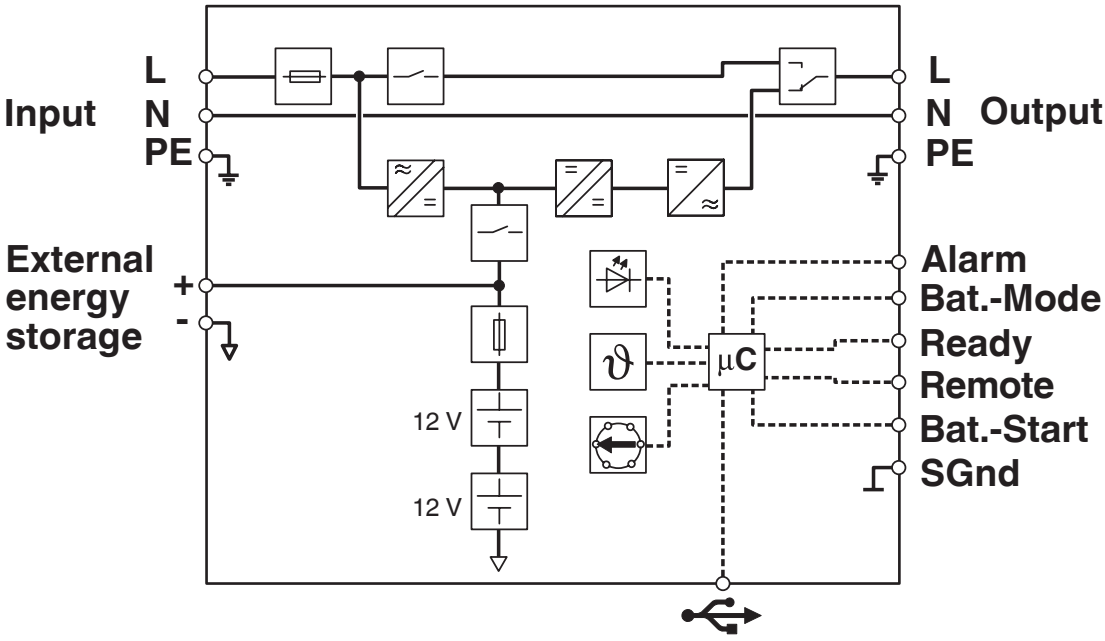

Block diagram

Graphic

Load Current	Buffertime													
	Minutes												Hours	
	1	1.5	2	4	6	8	10	15	20	30	40	50	1	1.5
50 W												2x	2x	2x
100 W										2x	2x	2x		
150 W								2x	2x	2x				
200 W							2x	2x	2x					
250 W						2x	2x	2x						
300 W					2x	2x	2x							
400 W				2x	2x	2x								
500 W			2x	2x	2x									
600 W		2x	2x	2x										

2x: In this case, two battery modules of the same capacity are required. The data is based on an ambient temperature of +25 °C at the start of use.

Buffer times for TRIO AC UPS

Approvals

To download certificates, visit the product detail page: https://www.phoenixcontact.com/gb/products/2905909

IECEE CB Scheme
Approval ID: DK-56005-M1-UL

EAC
Approval ID: RU S-DE.BL08.W.00764

EAC
Approval ID: RU-DE.B.00184/20

DNV
Approval ID: TAA00000BM

KC
Approval ID: R-R-PCK-2905909

Classifications

ECLASS

ECLASS-13.0	27040705
ECLASS-15.0	27040705

ETIM

ETIM 10.0	EC000382

UNSPSC

UNSPSC 21.0	39121000

Environmental product compliance

EU RoHS

Fulfills EU RoHS substance requirements	Yes
Exemption	7(a), 7(c)-I

China RoHS

Environment friendly use period (EFUP)	EFUP-3
	An article-related China RoHS declaration table can be found in the download area for the respective article under "Manufacturer declaration". For all articles with EFUP-E, no China RoHS declaration table issued and required.

EU REACH SVHC

REACH candidate substance (CAS No.)	Lead(CAS: 7439-92-1)
SCIP	f7fc7f0f-4fc5-4c8c-8269-59a3dd1d48c3

EF3.1 Climate Change

CO2e kg	157.007 kg CO2e

Phoenix Contact 2026 © - all rights reserved
https://www.phoenixcontact.com

PHOENIX CONTACT Ltd
Halesfield 13, Telford
Shropshire, TF7 4PG
01952 681700
info@phoenixcontact.co.uk