UNO-UPS/24DC/24DC/60W - Uninterruptible power supply

2905907

https://www.phoenixcontact.com/gb/products/2905907

Please be informed that the data shown in this PDF document is generated from our online catalog. Please find the complete data in the user documentation. Our general terms of use for downloads are valid.



Uninterruptible power supply with integrated battery, lead AGM, VRLA technology, 24 V DC, 2x 0.8 Ah.

Product description

UPS modules with integrated battery are particularly space-saving: the UPS module and battery are combined in one housing. It’s just a case of connecting a power supply upstream.

Your advantages

- Compact and narrow

ELEKTROGERÄTE RÜCKNAHME

Commercial data

Item number	2905907
Packing unit	1 pc
Minimum order quantity	1 pc
Sales key	CMUUV3
Product key	CMUUV3
GTIN	4055626007380
Weight per piece (including packing)	1,128 g
Weight per piece (excluding packing)	1,186 g
Customs tariff number	85371091
Country of origin	VN

Technical data

Notes

General

Note on the battery	This product contains a battery with a limited shelf life that must be charged every few months. The product packaging indicates when the battery must be started up or recharged. The general shelf life can be found in the energy storage devices area under “Latest startup”.

Input data

DC operation

Input voltage	24 V DC
Input voltage range	22.5 V DC ... 29.5 V DC
Voltage type of supply voltage	DC
Buffer period	45 min (0.5 A)
	20 min (1 A)
	8 min (2 A)
	5 min (2.5 A)
Current consumption	2.8 A (max.)
	< 60 mA
	< 300 mA
Input fuse	5 A (electronic)

Output data

Efficiency	> 95 % (for charged batteries)
	> 92 % (Battery operation)
Nominal output voltage	24 V DC
Nominal output current (I_N)	2.5 A
Bridging time	300 s
Output power	60 W
Power dissipation	3 W (Mains operation)
	6 W (Battery operation)
	Battery operation
Connection in series	no

Mains operation

Nominal output voltage	24 V DC
Output voltage range	$U_{Out} = U_{In}$ - 0.5 V DC
Nominal output current (I_N)	2.5 A (permanent)

Battery operation

Nominal output voltage	24 V DC
Output voltage range	20 V DC ... 27.3 V DC

Nominal output current (I_N)	2.5 A (permanent)

Signal: Alarm

Output description	Transistor (24 V DC/15 mA)

Signal: Battery mode

Output description	Transistor (24 V DC/15 mA)

Energy storage

Charging current	200 mA
Nominal capacity	2x 0.8 Ah
Charging time	approx. 5 h
Battery module service life	3 Years ... 5 Years (20 °C)
Latest startup date (battery only)	3 Months (0 °C ... 20 °C)
	1 Months (30 °C ... 40 °C)
Latest startup (battery only) - range	3 Months ... 1 Months (20 °C ... 30 °C)
Battery technology	Lead rechargeable battery module
Accumulator type	YUASA NP0.8-12
	YUCEL Y0.8-12
	YUVOLT 0.8-12
Battery presence check (cyclic)	60 s
Battery fuse	T 5 A 32 V
IQ technology	no

Connection data

Input

Connection method	Screw connection
Conductor cross-section, rigid min.	0.2 mm²
Conductor cross-section, rigid max.	2.5 mm²
Conductor cross-section flexible min.	0.2 mm²
Conductor cross-section flexible max.	2.5 mm²
Conductor cross-section AWG min.	24
Conductor cross-section AWG max.	14
Stripping length	7 mm
Screw thread	M3
Tightening torque, min	0.5 Nm
Tightening torque max	0.6 Nm

Output

Connection method	Screw connection
Conductor cross-section, rigid min.	0.2 mm²
Conductor cross-section, rigid max.	2.5 mm²
Conductor cross-section flexible min.	0.2 mm²
Conductor cross-section flexible max.	2.5 mm²
Conductor cross-section AWG min.	24

Conductor cross-section AWG max.	14
Stripping length	7 mm
Screw thread	M3
Tightening torque, min	0.5 Nm
Tightening torque max	0.6 Nm

Signal

Connection method	Screw connection
Conductor cross-section, rigid min.	0.2 mm²
Conductor cross-section, rigid max.	2.5 mm²
Conductor cross-section flexible min.	0.2 mm²
Conductor cross-section flexible max.	2.5 mm²
Conductor cross-section AWG min.	24
Conductor cross-section AWG max.	14
Stripping length	7 mm
Screw thread	M3
Tightening torque, min	0.5 Nm
Tightening torque max	0.6 Nm

Signaling

Types of signaling	LED

Signal output

Signalization designation	Power In OK
Status display	LED
Note on status display	static on

Signal output: Switching output

Signalization designation	Alarm
Status display	LED
Note on status display	static on

Signal output

Status display	LED
Note on status display	flashing

Signal output: Switching output

Signalization designation	Battery mode
Status display	LED
Note on status display	flashing

Signal output

Signalization designation	Service
Status display	LED
Note on status display	flashing

Product properties

Product type	DC UPS with integrated battery
Product family	UNO DC UPS with integrated battery
IQ technology	no
MTBF (IEC 61709, SN 29500)	> 1900000 h (40 °C)

Insulation characteristics

Protection class	III
Degree of pollution	2

Life expectancy (electrolytic capacitors)

Time	170312 h

Dimensions

Width	110 mm
Height	90 mm
Depth	84 mm

Installation dimensions

Installation distance right/left	0 mm / 0 mm (≤ 70 °C)
Installation distance top/bottom	30 mm / 30 mm (≤ 70 °C)

Mounting

Mounting type	DIN rail: 35 mm
Assembly note	alignable: 0 mm horizontally, 30 mm vertically
Mounting position	horizontal DIN rail NS 35, EN 60715

Material specifications

Housing material	Plastic
Housing material	PC+ABS
Type of housing	Plastic
Foot latch material	POM (Polyoxymethylene)

Environmental and real-life conditions

Ambient conditions

Degree of protection	IP20
Ambient temperature (operation)	-15 °C ... 50 °C
Ambient temperature (storage/transport)	-20 °C ... 60 °C
Max. permissible relative humidity (operation)	≤ 95 % (at 25 °C, non-condensing)
Shock	18 ms, 30g, in each space direction (according to IEC 60068-2-27)
Vibration (operation)	< 13.2 Hz, amplitude ±1.0 mm (according to IEC 60068-2-6)
	13.2 Hz ... 100 Hz, 0.7g

Standards and regulations

Standard - Electrical safety	IEC 62368-1 (SELV)

Approvals

UL approvals	UL Listed UL 508
	UL/C-UL Recognized UL 60950-1

EMC data

Electromagnetic compatibility	Conformance with EMC Directive 2014/30/EU
EMC requirements for noise emission	EN 61000-6-3
	EN 61000-6-4
EMC requirements for noise immunity	EN 61000-6-1
	EN 61000-6-2

Electrostatic discharge

Standards/regulations	EN 61000-4-2

Electrostatic discharge

Contact discharge	6 kV (Test Level 3)
Discharge in air	8 kV (Test Level 3)
Comments	Criterion A

Electromagnetic HF field

Standards/regulations	EN 61000-4-3

Electromagnetic HF field

Frequency range	80 MHz ... 3 GHz
Test field strength	10 V/m (Test Level 3)
Comments	Criterion A

Fast transients (burst)

Standards/regulations	EN 61000-4-4

Fast transients (burst)

Input	2 kV (Test Level 3 - asymmetrical)
Output	2 kV (Test Level 3 - asymmetrical)
Signal	2 kV (Test Level 4 - asymmetrical)
Comments	Criterion A

Surge voltage load (surge)

Standards/regulations	EN 61000-4-5

Surge voltage load (surge)

Input	1 kV (Test Level 3 - symmetrical)
	2 kV (Test Level 3 - asymmetrical)
Output	1 kV (Test Level 3 - symmetrical)
	2 kV (Test Level 3 - asymmetrical)
Signal	1 kV (Test Level 2 - asymmetrical)
Comments	Criterion A

Conducted interference

Standards/regulations	EN 61000-4-6

Conducted interference

Input/output/signal	asymmetrical
Frequency range	0.15 MHz ... 80 MHz
Comments	Criterion A
Voltage	10 V (Test Level 3)

Emitted interference

Emitted radio interference in acc. with EN 55011	EN 55011 (EN 55022) Class B, area of application: Industry and residential

Criteria

Criterion A	Normal operating behavior within the specified limits.
Criterion B	Temporary impairment to operational behavior that is corrected by the device itself.

Drawings

Block diagram

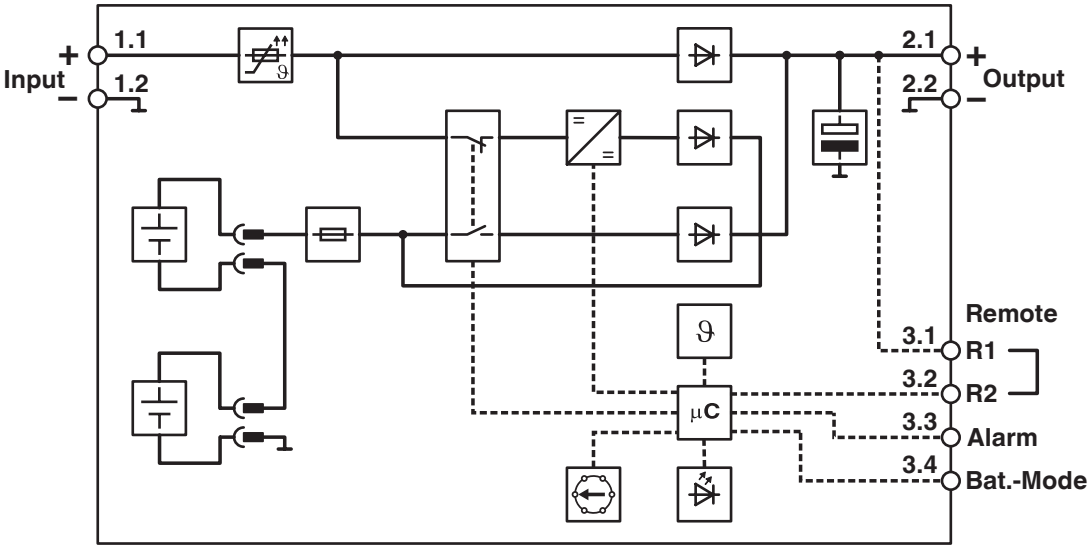

Block diagram

Graphic

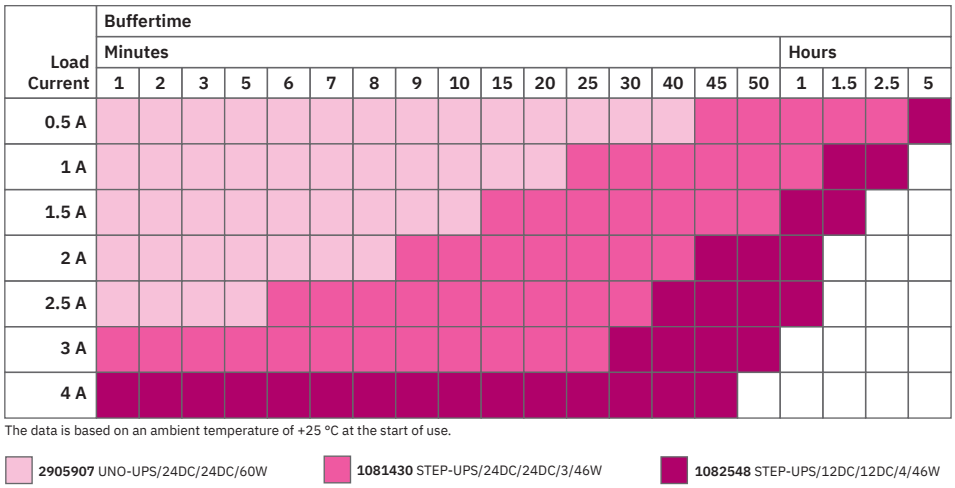

Buffer times for UNO DC UPS with integrated battery

Approvals

To download certificates, visit the product detail page: https://www.phoenixcontact.com/gb/products/2905907

cUL Recognized
Approval ID: FILE E 214596

UL Recognized
Approval ID: FILE E 214596

IECEE CB Scheme
Approval ID: DK-47330-A1-UL

EAC
Approval ID: RU S-DE.BL08.W.00764

EAC
Approval ID: RU-DE.B.00184/20

KC
Approval ID: R-R-PCK-2905907

cULus Listed
Approval ID: E123528-20150721

IECEE CB Scheme
Approval ID: NL2-021197

Classifications

ECLASS

ECLASS-13.0	27040705
ECLASS-15.0	27040705

ETIM

ETIM 10.0	EC000382

UNSPSC

UNSPSC 21.0	39121000

Environmental product compliance

EU RoHS

Fulfills EU RoHS substance requirements	Yes
Exemption	7(a), 7(c)-I

China RoHS

Environment friendly use period (EFUP)	EFUP-25
	An article-related China RoHS declaration table can be found in the download area for the respective article under "Manufacturer declaration". For all articles with EFUP-E, no China RoHS declaration table issued and required.

EU REACH SVHC

REACH candidate substance (CAS No.)	Lead(CAS: 7439-92-1)
SCIP	133f8ee5-d2ce-44e8-baf9-c674f2324f10

Phoenix Contact 2026 © - all rights reserved
https://www.phoenixcontact.com

PHOENIX CONTACT Ltd
Halesfield 13, Telford
Shropshire, TF7 4PG
01952 681700
info@phoenixcontact.co.uk