ELR H5-I-PT/500AC-06-IFS - Hybrid motor starter

2905144

https://www.phoenixcontact.com/gb/products/2905144

Please be informed that the data shown in this PDF document is generated from our online catalog. Please find the complete data in the user documentation. Our general terms of use for downloads are valid.



Networkable hybrid motor starter for reversing 3~ AC motors up to 500 V AC, output current: 0. 6 A, adjustable overload shutdown, and Push-in connection, DIN rail connector provided.

Your advantages

- 22.5 mm wide
- Reduction in wiring
- Space saving
- Long service life
- 3-phase loop bridges
- Adjustable current for bimetal function
- Low-wear switching

Commercial data

Item number	2905144
Packing unit	1 pc
Minimum order quantity	1 pc
Sales key	DK7442
Product key	DK7442
GTIN	4046356920360
Weight per piece (including packing)	297.1 g
Weight per piece (excluding packing)	282.7 g
Customs tariff number	85371098
Country of origin	DE

Technical data

Product properties

Product type	Hybrid motor starters
Product family	CONTACTRON
Operating mode	100% operating factor

Electrical properties

Number of phases	3
Motor starter type	Reversing starter
Switching frequency	≤ 2 Hz (Load-dependent)
Maximum power dissipation for nominal condition	0.5 W
Switching frequency	≤ 2 Hz (Load-dependent)
Maximum power dissipation	2.5 W
Minimum power dissipation	0.88 W
Coordination type	1

Supply

Rated control circuit supply voltage U_S	24 V DC
Control supply voltage range	19.2 V DC ... 30 V DC
Rated control supply current I_S	60 mA
Protective circuit	Surge protection
	Reverse polarity protection; Parallel polarity protection diode

Insulation characteristics

Rated insulation voltage	550 V
Rated surge voltage	6 kV
Overvoltage category	III
Degree of pollution	2
Insulation characteristics between the control input and control supply voltage, and auxiliary circuit to the main circuit	Safe isolation (IEC 60947-1)
Isolation characteristics between the control input and control supply voltage to auxiliary circuit	Safe isolation (IEC 60947-1) in the auxiliary circuit ≤ 300 V AC
	Safe isolation (EN 50178) in the auxiliary circuit ≤ 300 V AC

Emergency tripping

Operate threshold	> 10 A
Response time	< 0.5 s

Output data

AC output

Rated operating voltage U_e	500 V AC
Operating voltage range	42 V AC ... 550 V AC
Rated operating current I_e	0.6 A (AC-51)
	0.6 A (AC-53a)
Mains frequency	50/60 Hz

Load current range	75 mA ... 600 mA (see to derating)
Trigger characteristic in acc. with IEC 60947-4-2	Class 10
Cooling time	20 min (for auto reset)
Leakage current	0 mA
Protective circuit	Surge protection; Varistor

Connection data

Control circuits

Connection method	Push-in connection
Stripping length	10 mm
Conductor cross-section rigid	0.2 mm² ... 2.5 mm²
Conductor cross-section flexible	0.2 mm² ... 2.5 mm²
Conductor cross-section AWG	24 ... 14

Load circuit

Connection method	Push-in connection
Stripping length	10 mm
Conductor cross-section rigid	0.2 mm² ... 2.5 mm²
Conductor cross-section flexible	0.2 mm² ... 2.5 mm²
Conductor cross-section AWG	24 ... 14

Signaling

Status display	LED (yellow)
Operating voltage display	Green LED
Error indication	Red LED

Dimensions

Width	22.5 mm
Height	107.5 mm
Depth	114 mm

Material specifications

Flammability rating according to UL 94 (Housing)	V0 (Housing)

Environmental and real-life conditions

Ambient conditions

Degree of protection	IP20
Ambient temperature (operation)	-5 °C ... 60 °C (observe derating)
Ambient temperature (storage/transport)	-40 °C ... 80 °C
Altitude	≤ 2000 m

Approvals

UL approval

Certificate	NLDX.E228652

	NRNT.E172140

UL data

SCCR	100 kA (480 V AC (fuse: 30 A class CC/30 A class J (high fault)))
	5 kA (480 V AC (fuse: 20 A RK5 (standard fault)))
FLA	0.6 A (480 V AC)
Group installation	20 A (class RK5, SCCR 5kA (480 V AC), #24 - 14 AWG max. solid and stranded)
	30 A (class CC or J, SCCR 100kA (480 V AC), #24 - 14 AWG max, solid and stranded)
Category code	NLDX / NRNT
Horsepower ratings	-

Standards and regulations

Standards/regulations

Standards/regulations	IEC 60947-1
	EN 60947-4-2

Mounting

Mounting type	DIN rail mounting
Assembly note	alignable, for spacing see derating
Mounting position	vertical (horizontal DIN rail, motor output below)

Drawings

Diagram

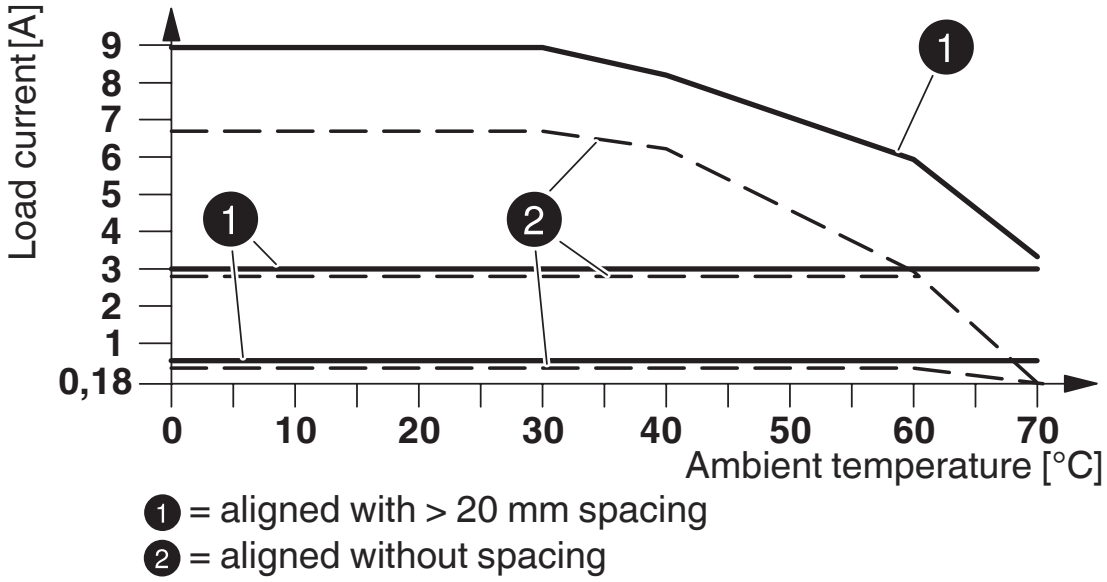

Derating diagram

Block diagram

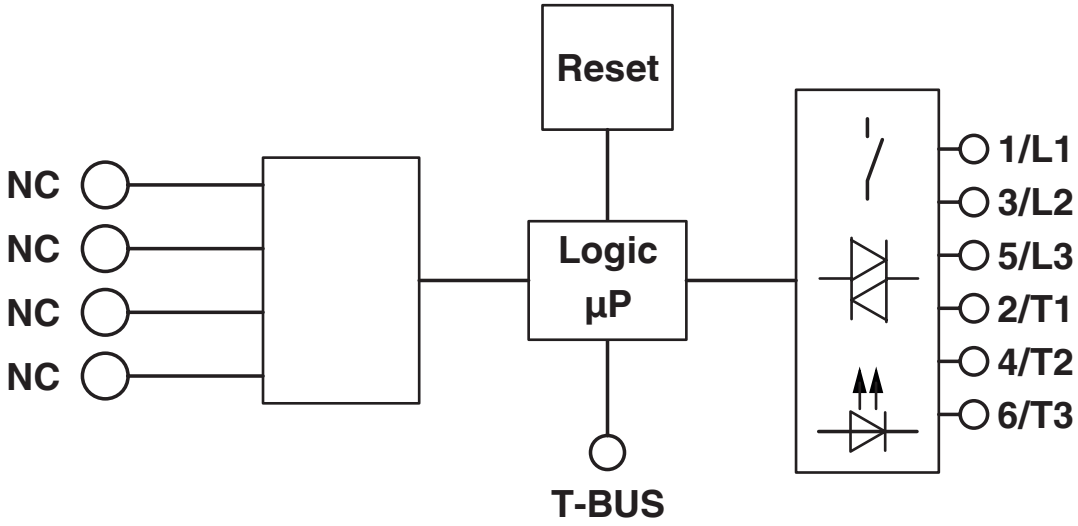

Classifications

UNSPSC

UNSPSC 21.0	25173900

Environmental product compliance

EU RoHS

Fulfills EU RoHS substance requirements	Yes
Exemption	7(a), 7(c)-I

China RoHS

Environment friendly use period (EFUP)	EFUP-50
	An article-related China RoHS declaration table can be found in the download area for the respective article under "Manufacturer declaration". For all articles with EFUP-E, no China RoHS declaration table issued and required.

EU REACH SVHC

REACH candidate substance (CAS No.)	Lead(CAS: 7439-92-1)

Phoenix Contact 2026 © - all rights reserved
https://www.phoenixcontact.com

PHOENIX CONTACT Ltd
Halesfield 13, Telford
Shropshire, TF7 4PG
01952 681700
info@phoenixcontact.co.uk