PLC-OPT- 24DC/230AC/2.4/ACT - Solid-state relay module

2904632

https://www.phoenixcontact.com/gb/products/2904632

Please be informed that the data shown in this PDF document is generated from our online catalog. Please find the complete data in the user documentation. Our general terms of use for downloads are valid.



PLC-INTERFACE for output functions, consisting of PLC-BPT.../ACT basic terminal block with push-in connection and integrated miniature solid-state relay, for mounting on DIN rail NS 35/7,5, 1 N/O contact, input: 24 V DC, output: 24 - 253 V AC/2.4 A

Commercial data

Item number	2904632
Packing unit	10 pc
Minimum order quantity	1 pc
Sales key	DK62A4
Product key	DK62A4
GTIN	4046356867788
Weight per piece (including packing)	31.35 g
Weight per piece (excluding packing)	31.06 g
Customs tariff number	85364190
Country of origin	DE

Technical data

Product properties

Product type	Solid-state relay module
Product family	PLC-INTERFACE
Application	Output function
Operating mode	100% operating factor

Insulation characteristics: Air clearances and creepage distances between the power circuits

Insulation	Basic insulation
Overvoltage category	III
Pollution degree	2

Data management status

Date of last data management	15.04.2026

Electrical properties

Maximum power dissipation for nominal condition	0.19 W
Test voltage (Input/output)	2.5 kV (50 Hz, 1 min., input/output)

Air clearances and creepage distances between the power circuits

Rated insulation voltage	260 V AC
Rated surge voltage	4 kV

Input data

Rated actuating voltage U_C	24 V DC
Voltage range with reference to U_C	0.8 ... 1.2
Rated actuating current I_C	8 mA
Input voltage range	19.2 V DC ... 28.8 V DC
"0" signal switching threshold in reference to U_C	< 0.4
"1" signal switching threshold in reference to U_C	> 0.8
Typical response time	10 ms (at U_C)
Typical turn-off time	10 ms (at U_C)
Status display	LED (yellow)
Protective circuit	Reverse polarity protection
	Surge protection
Surge voltage protection	> 33 V
Transmission frequency	10 Hz

Output data

Output data

Contact switching type	1 N/O contact
Design of digital output	electronic
Contact connection type	Power contact

Output voltage range	24 V AC ... 253 V AC
Limiting continuous current	2.4 A (see to derating)
Maximum inrush current	250 A (20 ms)
Min. load current	10 mA
Leakage current	< 3 mA
Max. load value	340 A^2s (tp = 10 ms, at 25 °C)
Surge voltage protection	> 275 V
Voltage drop at max. limiting continuous current	< 1 V
Output circuit	2-conductor, zero voltage switch
Protective circuit	RCV circuit

Connection data

Connection method	Push-in connection
Stripping length	10 mm
Conductor cross-section rigid	0.14 mm² ... 2.5 mm²
Conductor cross-section flexible	0.14 mm² ... 2.5 mm²
	0.2 mm² ... 2.5 mm² (Single ferrule)
	2x 0.5 mm² ... 1 mm² (TWIN ferrule)
Conductor cross-section AWG	26 ... 14

Dimensions

Item dimensions

Width	6.2 mm
Height	80 mm
Depth	94 mm

Material specifications

Color	gray (RAL 7042)
Flammability rating according to UL 94 (Housing)	V0 (Housing)

Environmental and real-life conditions

Ambient conditions

Degree of protection	IP20
Ambient temperature (operation)	-25 °C ... 60 °C
Ambient temperature (storage/transport)	-40 °C ... 85 °C

Approvals

Corrosive gas test

Identification	ISA-S71.04. G3 Harsh Group
	EN 60068-2-60

Standards and regulations

Air clearances and creepage distances between the power circuits

Standards/regulations	IEC 60947-5-1

Mounting

Mounting type	DIN rail mounting
Assembly note	in rows with zero spacing
Mounting position	any

Drawings

Diagram

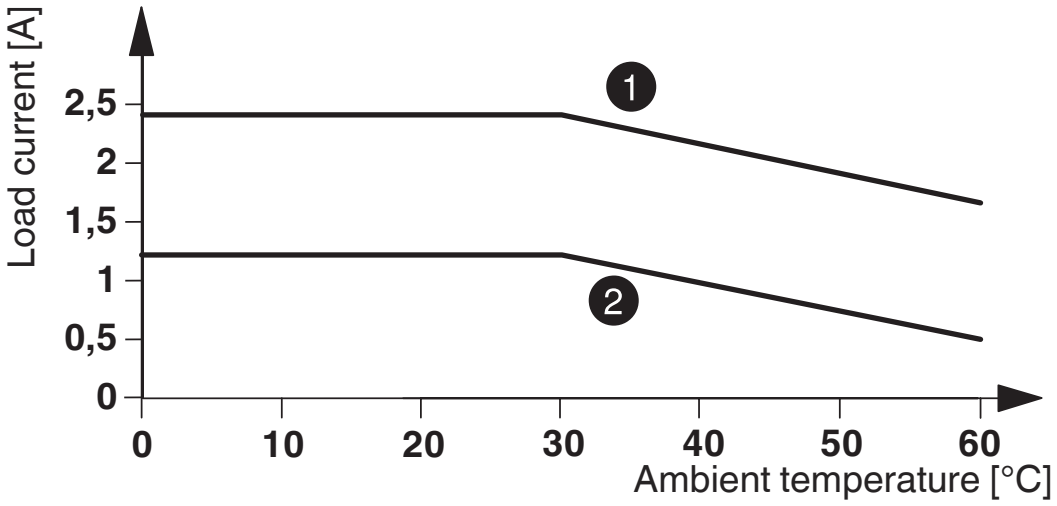

1 = aligned with > 20 mm spacing
2 = aligned without spacing

Circuit diagram

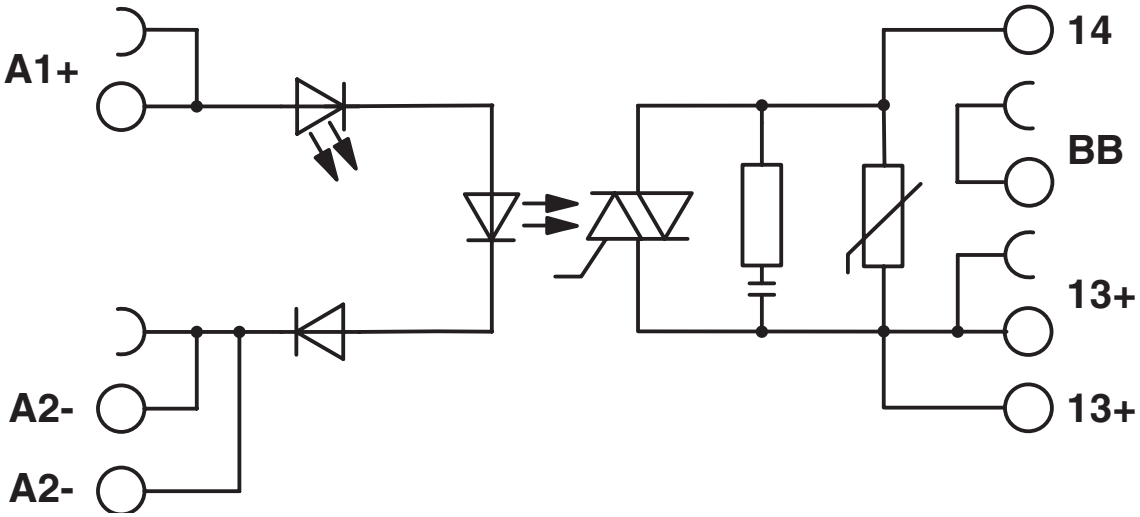

Approvals

To download certificates, visit the product detail page: https://www.phoenixcontact.com/gb/products/2904632

cULus Listed
Approval ID: E140324

cULus Listed
Approval ID: E140324

cULus Listed
Approval ID: E140324

Classifications

ECLASS

ECLASS-13.0	27371604
ECLASS-15.0	27371604

ETIM

ETIM 10.0	EC001504

UNSPSC

UNSPSC 21.0	39122300

Environmental product compliance

EU RoHS

Fulfills EU RoHS substance requirements	Yes
Exemption	7(a), 7(c)-I

China RoHS

Environment friendly use period (EFUP)	EFUP-50
	An article-related China RoHS declaration table can be found in the download area for the respective article under "Manufacturer declaration". For all articles with EFUP-E, no China RoHS declaration table issued and required.

EU REACH SVHC

REACH candidate substance (CAS No.)	Lead(CAS: 7439-92-1)
SCIP	2b8687ab-d8f8-4841-a29e-e4a3c6bca309

EF3.1 Climate Change

CO2e kg	1.347 kg CO2e

Phoenix Contact 2026 © - all rights reserved
https://www.phoenixcontact.com

PHOENIX CONTACT Ltd
Halesfield 13, Telford
Shropshire, TF7 4PG
01952 681700
info@phoenixcontact.co.uk