ELR H5-I-PT- 24DC/500AC-0,6 - Hybrid motor starter

2903908

https://www.phoenixcontact.com/gb/products/2903908

Please be informed that the data shown in this PDF document is generated from our online catalog. Please find the complete data in the user documentation. Our general terms of use for downloads are valid.



Hybrid motor starter for reversing 3~ AC motors up to 500 V AC and 0.6 A output current, with 24 V DC control voltage, adjustable overload shutdown, and push-in connection.

Your advantages

- 22.5 mm wide
- Reduction in wiring
- Space saving
- Long service life
- 3-phase loop bridges
- Adjustable current for bimetal function
- Low-wear switching

Commercial data

Item number	2903908
Packing unit	1 pc
Minimum order quantity	1 pc
Sales key	DK7422
Product key	DK7422
GTIN	4046356771313
Weight per piece (including packing)	237.54 g
Weight per piece (excluding packing)	214.12 g
Customs tariff number	85371098
Country of origin	DE

Technical data

Notes

Notes on operation	If this device is to be used in combination with the CrossPowerSystem power distribution board, the device mount for the 16 A fuse (order designation: EM-CPS-DA-22,5F/16A; order number: 1002668) is required in order to attach the hybrid motor starter to the power distribution board.

Product properties

Product type	Hybrid motor starters
Product family	CONTACTRON
Operating mode	100% operating factor

Electrical properties

Number of phases	3
Motor starter type	Reversing starter
Switching frequency	≤ 2 Hz (Load-dependent)
Maximum power dissipation for nominal condition	0.4 W
Switching frequency	≤ 2 Hz (Load-dependent)
Maximum power dissipation	1.5 W
Minimum power dissipation	1.1 W
Coordination type	1

Supply

Rated control circuit supply voltage U_S	24 V DC
Control supply voltage range	19.2 V DC ... 30 V DC
Rated control supply current I_S	40 mA
Protective circuit	Surge protection
	Reverse polarity protection

Insulation characteristics

Rated insulation voltage	500 V
Rated surge voltage	6 kV
Overvoltage category	III
Degree of pollution	2
Insulation characteristics between the control input and control supply voltage, and auxiliary circuit to the main circuit	Safe isolation (IEC 60947-1) at operating voltage ≤ 300 V AC (e. g., 230/400 V AC, 277/480 V AC)
	Basic insulation (IEC 60947-1) at operating voltage 300 V AC ... 500 V AC
Isolation characteristics between the control input and control supply voltage to auxiliary circuit	Safe isolation (IEC 60947-1) in the auxiliary circuit ≤ 300 V AC

Input data

Control

Input name	Control input right/left

Rated actuating voltage U_C	24 V DC
Triggering voltage range	19.2 V DC ... 30 V DC
Rated actuating current I_C	5 mA (Input type 1)
Switching threshold	9.6 V (“0” signal)
	19.2 V (“1” signal)
Typical turn-off time	< 30 ms
Protective circuit	Reverse polarity protection

Output data

AC output

Rated operating voltage U_e	500 V AC
Operating voltage range	42 V AC ... 550 V AC
Rated operating current I_e	0.6 A (AC-51)
	0.6 A (AC-53a)
Mains frequency	50/60 Hz
Load current range	75 mA ... 600 mA (see to derating)
Trigger characteristic in acc. with IEC 60947-4-2	Class 10A
Cooling time	20 min (for auto reset)
Leakage current	0 mA
Protective circuit	Surge protection

Acknowledge output

Note	Confirmation: floating change-over contact, signal contact
Contact switching type	1 changeover contact
Switching capacity in accordance with IEC 60947-5-1	3 A (230 V, AC15)
	2 A (24 V (DC13))

Connection data

Control circuits

Connection method	Push-in connection
Stripping length	10 mm
Conductor cross-section rigid	0.2 mm² ... 2.5 mm²
Conductor cross-section flexible	0.2 mm² ... 2.5 mm²
Conductor cross-section AWG	24 ... 14

Load circuit

Connection method	Push-in connection
Stripping length	10 mm
Conductor cross-section rigid	0.2 mm² ... 2.5 mm²
Conductor cross-section flexible	0.2 mm² ... 2.5 mm²
Conductor cross-section AWG	24 ... 14

Signaling

Status display	LED (yellow)

Operating voltage display	Green LED
Error indication	Red LED

Dimensions

Width	22.5 mm
Height	107.5 mm
Depth	114 mm

Material specifications

Flammability rating according to UL 94 (Housing)	V0 (Housing)

Environmental and real-life conditions

Ambient conditions

Degree of protection	IP20
Ambient temperature (operation)	-25 °C ... 70 °C (observe derating)
Ambient temperature (storage/transport)	-40 °C ... 80 °C
Altitude	≤ 2000 m

Approvals

UL approval

Certificate	NLDX.E228652

UL data

SCCR	100 kA (500 V AC (fuse: 30 A class CC/30 A class J (high fault)))
	5 kA (500 V AC (fuse: 20 A RK5 (standard fault)))
FLA	0.6 A (500 V AC)
Group installation	20 A (class RK5, SCCR 5kA, #24 - 14 AWG max. solid and stranded)
	30 A (class CC or J, SCCR 100kA, #24 - 14 AWG max, solid and stranded)
Category code	NLDX / NRNT

Standards and regulations

Standards/regulations

Standards/regulations	IEC 60947-1
	IEC 60947-4-2

Mounting

Mounting type	DIN rail mounting
Assembly note	alignable, for spacing see derating
Mounting position	vertical (horizontal DIN rail, motor output below)

Drawings

Diagram

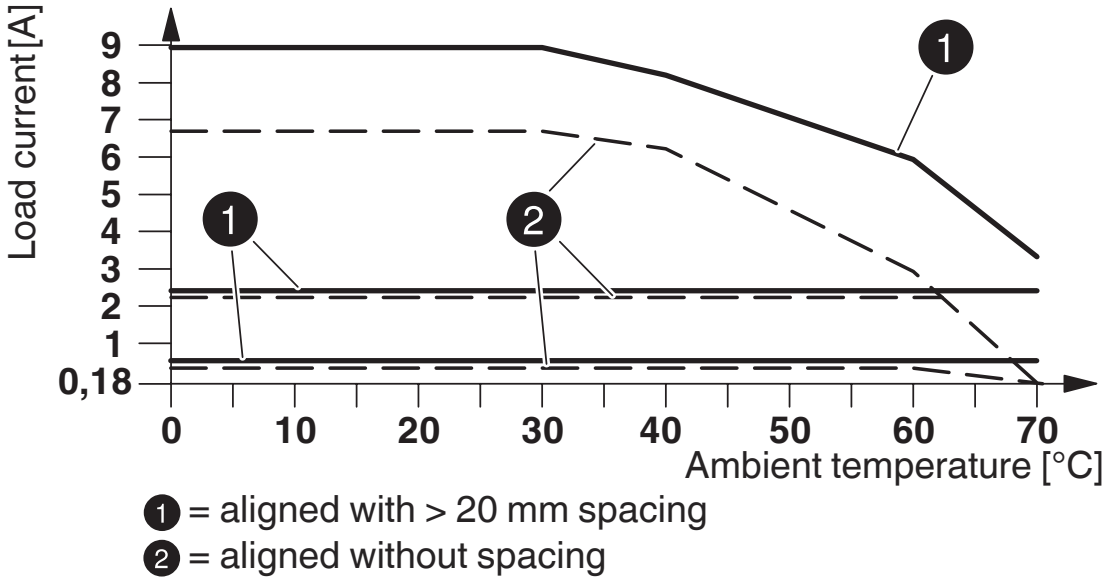

Derating diagram

Block diagram

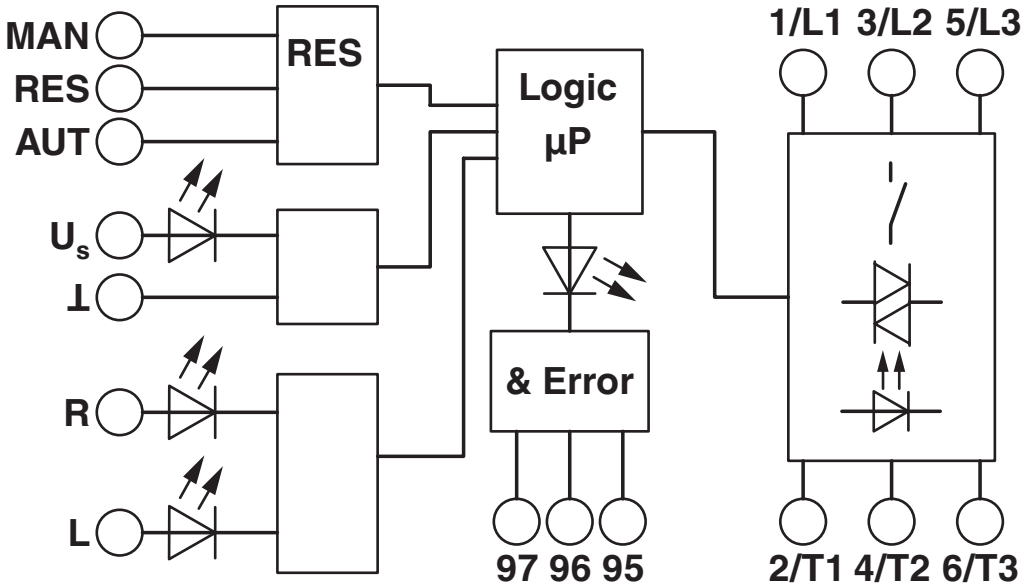

Approvals

To download certificates, visit the product detail page: https://www.phoenixcontact.com/gb/products/2903908

IECEE CB Scheme
Approval ID: DE1-55728

UL Listed
Approval ID: FILE E 323771

CCC
Approval ID: 2016010304871315

cUL Listed
Approval ID: FILE E 323771

cUL Listed
Approval ID: E228652

UL Listed
Approval ID: E228652

CCC
Approval ID: 2024010304672817

Classifications

ECLASS

ECLASS-13.0	27370905
ECLASS-15.0	27370905

ETIM

ETIM 10.0	EC001037

UNSPSC

UNSPSC 21.0	25173900

Environmental product compliance

EU RoHS

Fulfills EU RoHS substance requirements	Yes
Exemption	7(a), 7(a)-I, 7(c)-I

China RoHS

Environment friendly use period (EFUP)	EFUP-50
	An article-related China RoHS declaration table can be found in the download area for the respective article under "Manufacturer declaration". For all articles with EFUP-E, no China RoHS declaration table issued and required.

EU REACH SVHC

REACH candidate substance (CAS No.)	1-Methyl-2-pyrrolidone (NMP)(CAS: 872-50-4)
	Lead(CAS: 7439-92-1)
SCIP	a6b2703e-733e-486c-b54c-e47a8bcce463

Phoenix Contact 2026 © - all rights reserved
https://www.phoenixcontact.com

PHOENIX CONTACT Ltd
Halesfield 13, Telford
Shropshire, TF7 4PG
01952 681700
info@phoenixcontact.co.uk