EMD-BL-V-230 - Monitoring relay

2903523

https://www.phoenixcontact.com/gb/products/2903523

Please be informed that the data shown in this PDF document is generated from our online catalog. Please find the complete data in the user documentation. Our general terms of use for downloads are valid.



Monitoring relay for monitoring 1-phase voltages of 24 V AC/DC or 230 V AC, undervoltage or window, 1 changeover contact, with screw connection

Product description

Safety and system availability requirements are constantly on the increase – across all industries. Processes are becoming more and more complex, not only in machine building and the chemical industry but also in building technology. The demands placed on energy technology are also constantly on the rise.
It is only by continuously monitoring key network and system parameters that error-free and therefore cost-effective operation can be achieved. Electronic monitoring relays from the EMD series are available for a wide range of monitoring tasks so that the consequences of errors can be avoided or kept within limits.
The operating states are signaled via color LEDs and any errors that occur can be sent to a controller via a floating contact or can shut down a section of the system. All device versions are equipped with response delays so that measured values outside the set monitoring range can be briefly tolerated.

Commercial data

Item number	2903523
Packing unit	1 pc
Minimum order quantity	1 pc
Sales key	DK6481
Product key	DK6481
GTIN	4046356747271
Weight per piece (including packing)	81 g
Weight per piece (excluding packing)	79.4 g
Customs tariff number	85364900
Country of origin	AT

Technical data

Product properties

Product type	Voltage monitoring relay
Operating mode	100% operating factor
Mechanical service life	15x 10^6 cycles

Insulation characteristics

Insulation	Basic insulation
Overvoltage category	III
Pollution degree	2

Electrical properties

Service life electrical	1x 10^5 cycles
Mains type	1-phase
Rated insulation voltage	300 V (Supply circuit)
	250 V (Output circuit)
Rated surge voltage	4 kV

Supply

Supply voltage	-25 % ... +20 % (= measuring voltage)
Supply voltage range	-25 % ... +20 % (= measuring voltage)
Nominal power consumption	10 VA (At 230 V AC (0.6 W))
	1.3 VA (At 24 V AC (0.8 W))
	0.6 W (at 24 V DC)

Input data

Input name	Measuring input
Measured value	DC, AC sine (48 Hz ... 63 Hz)
Input voltage range	0 V DC ... 24 V DC (Connection terminal blocks: U1 and GND)
	0 V AC ... 24 V AC (Connection terminal blocks: U2 and GND)
	0 V AC ... 230 V AC (Connection terminal blocks: U3 and GND)
Frequency range	48 Hz ... 63 Hz
Maximum temperature coefficient	≤ 0.05 %
Setting range for response delay	0.1 s ... 10 s
Min. setting range	75 % ... 115 % (From U_N)
Max. setting range	80 % ... 120 % (From U_N)
Function	Undervoltage
	Window
Basic accuracy	≤ 5 % (of scale end value)
Setting accuracy	± 5 % (of scale end value)
Repeat accuracy	≤ 2 %
Recovery time	> 500 ms

Output data

Switching

Contact switching type	1 floating changeover contact
Maximum switching voltage	250 V AC (in acc. with IEC 60664-1)
Interrupting rating (ohmic load) max.	1250 VA (5 A / 250 V AC)
Output fuse	5 A (fast-blow)

Connection data

Connection method	Screw connection
Stripping length	8 mm
Conductor cross-section rigid	0.5 mm² ... 2.5 mm²
Conductor cross-section flexible	0.5 mm² ... 2.5 mm²
Conductor cross-section AWG	20 ... 14
Tightening torque	1 Nm ... 1 Nm

Signaling

Status display	LED (yellow)
Operating voltage display	Green LED
Error indication	Red LED

Dimensions

Width	17.5 mm
Height	89.5 mm
Depth	65.5 mm

Material specifications

Color	gray (RAL 7042)
Housing insulation material	Polyamide PA 6.6, self-extinguishing

Environmental and real-life conditions

Ambient conditions

Degree of protection (Housing)	IP40 (Housing)
Degree of protection (Connection terminal blocks)	IP20 (Connection terminal blocks)
Ambient temperature (operation)	-25 °C ... 55 °C
Ambient temperature (storage/transport)	-25 °C ... 70 °C
Climatic class	3K3 (in acc. with EN 60721)
Permissible humidity (operation)	15 % ... 85 %

Approvals

CE

Certificate	CE-compliant

UL, USA/Canada

Identification	UL/C-UL Listed UL 508

EMC data

Electromagnetic compatibility	Conformance with EMC directive
Low Voltage Directive	Conformance with Low Voltage Directive
Noise immunity	EN 61000-6-2

Noise emission

Standards/regulations	EN 61000-6-3

Standards and regulations

Standards/regulations	DIN EN 60947-5-1

Mounting

Mounting type	DIN rail mounting
Assembly note	on standard DIN rail NS 35 in accordance with EN 60715
Mounting position	any

Drawings

Block diagram

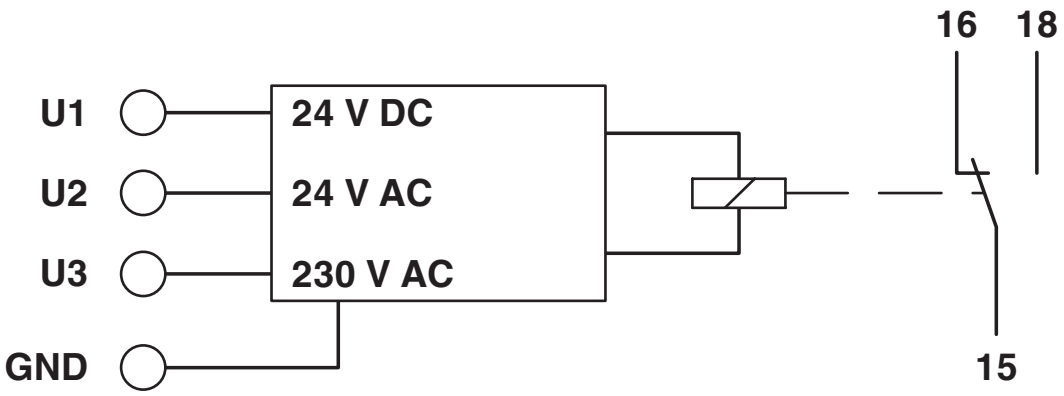

Approvals

To download certificates, visit the product detail page: https://www.phoenixcontact.com/gb/products/2903523

UL Listed
Approval ID: FILE E 172140

cUL Listed
Approval ID: FILE E 172140

Classifications

ECLASS

ECLASS-13.0	27371801
ECLASS-15.0	27371801

ETIM

ETIM 10.0	EC001438

UNSPSC

UNSPSC 21.0	41113600

Environmental product compliance

EU RoHS

Fulfills EU RoHS substance requirements	Yes, No exemptions

China RoHS

Environment friendly use period (EFUP)	EFUP-E
	No hazardous substances above the limits

EU REACH SVHC

REACH candidate substance (CAS No.)	No substance above 0.1 wt%

EF3.1 Climate Change

CO2e kg	3.99 kg CO2e

Phoenix Contact 2026 © - all rights reserved
https://www.phoenixcontact.com

PHOENIX CONTACT Ltd
Halesfield 13, Telford
Shropshire, TF7 4PG
01952 681700
info@phoenixcontact.co.uk