PLC-OPT-LPE-24DC/48DC/100 - Timer module

2903173

https://www.phoenixcontact.com/gb/products/2903173

Please be informed that the data shown in this PDF document is generated from our online catalog. Please find the complete data in the user documentation. Our general terms of use for downloads are valid.



1-channel pulse expansion module, input: 24 V DC, output: 3 - 48 V DC/100 mA, supply: 24 V DC, Push-in connection

Product description

DIP switch settings:

Function
DIP A low - no restart when triggered again (default)
DIP A high - restart when triggered again
DIP B low - input pulse time > 2 ms (default)
DIP B high - input pulse time > 100 µs

Pulse expansion times
DIP 1 - 10 ms
DIP 2 - 20 ms
DIP 3 - 40 ms
DIP 4 - 80 ms
DIP 5 - 160 ms
DIP 6 - 320 ms
DIP 7 - 640 ms
DIP 8 - 1280 ms
No DIP switch set: no switching function for the output

If the input signal is longer than the selected time, the output is switched off after removal of the input signal.

The settings are applied after a voltage reset of the rated control supply voltage.

Commercial data

Item number	2903173
Packing unit	1 pc
Minimum order quantity	1 pc
Sales key	DK62A3
Product key	DK62A3
GTIN	4046356727860
Weight per piece (including packing)	36.1 g
Weight per piece (excluding packing)	32.35 g
Customs tariff number	85371098
Country of origin	DE

Technical data

Product properties

Product type	Solid-state relay module
Product family	PLC-INTERFACE
Application	Pulse stretching
Operating mode	100% operating factor

Insulation characteristics: Air clearances and creepage distances between the power circuits

Insulation	Basic insulation
Overvoltage category	II
Pollution degree	2

Data management status

Date of last data management	20.04.2026

Electrical properties

Maximum power dissipation for nominal condition	0.07 W
Test voltage (Input/output)	2.5 kV_{rms} (50 Hz, 1 min., input/output)

Air clearances and creepage distances between the power circuits

Rated insulation voltage	50 V DC
Rated surge voltage	0.5 kV

Input data

Rated control circuit supply voltage U_S	24 V DC
Voltage range with reference to U_S	0.8 ... 1.2
Rated control supply current I_S	13 mA (Input low, output low)
	19 mA (Input high, output high)
Rated actuating voltage U_C	24 V DC
Rated actuating current I_C	3 mA
Input voltage range	19.2 V DC ... 28.8 V DC
"0" signal switching threshold in reference to U_C	< 0.4
"1" signal switching threshold in reference to U_C	> 0.8
Status display	LED (yellow)
Operating voltage display	Green LED
Protective circuit	Reverse polarity protection
	Surge protection
Surge voltage protection	> 33 V DC

Output data

Contact switching type	1 N/O contact
Design of digital output	electronic
Output voltage range	3 V DC ... 48 V DC
Limiting continuous current	100 mA

Surge voltage protection	> 54 V DC
Voltage drop at max. limiting continuous current	< 1 V DC
Output circuit	3-conductor, ground-referenced
Protective circuit	Reverse polarity protection
	Surge protection
	Free running

Connection data

Connection method	Push-in connection
Stripping length	10 mm
Conductor cross-section rigid	0.14 mm² ... 2.5 mm²
Conductor cross-section flexible	0.14 mm² ... 2.5 mm²
	0.2 mm² ... 2.5 mm² (Single ferrule)
	2x 0.5 mm² ... 1 mm² (TWIN ferrule)
Conductor cross-section AWG	26 ... 14

Dimensions

Item dimensions

Width	6.2 mm
Height	80 mm
Depth	94 mm

Material specifications

Color	gray (RAL 7042)

Environmental and real-life conditions

Ambient conditions

Degree of protection	IP20
Ambient temperature (operation)	-25 °C ... 60 °C
Ambient temperature (storage/transport)	-25 °C ... 75 °C

Approvals

Corrosive gas test

Identification	ISA-S71.04. G3 Harsh Group
	EN 60068-2-60

Standards and regulations

Air clearances and creepage distances between the power circuits

Standards/regulations	IEC 60947-5-1

Mounting

Mounting type	DIN rail mounting
Assembly note	in rows with zero spacing

Mounting position	any

Drawings

Connection diagram

t_{DIP}							
S1	**S2**	**S3**	**S4**	**S5**	**S6**	**S7**	**S8**
10	—	—	—	—	—	—	—
—	20	—	—	—	—	—	—
—	—	40	—	—	—	—	—
—	—	—	80	—	—	—	—
—	—	—	—	160	—	—	—
—	—	—	—	—	320	—	—
—	—	—	—	—	—	640	—
—	—	—	—	—	—	—	1280

DIP switches

Diagram

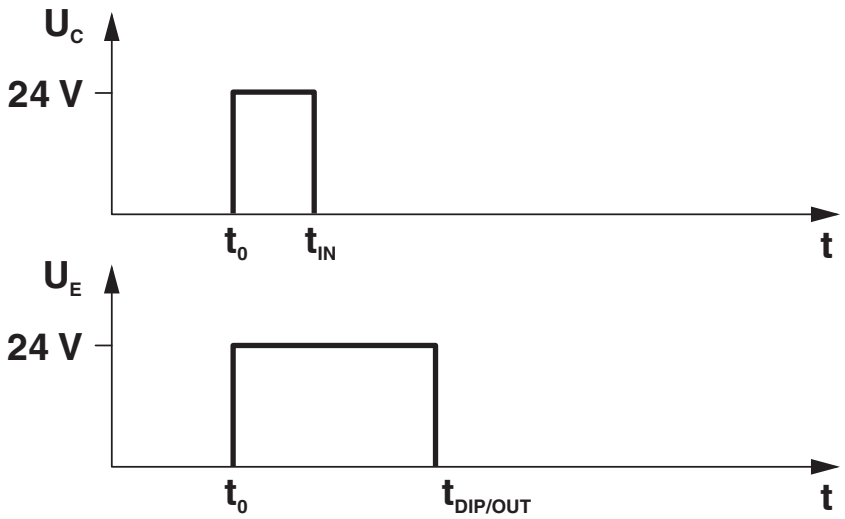

Input pulse t_{IN} < set output pulse t_{DIP} (no restart when triggered again)

Diagram

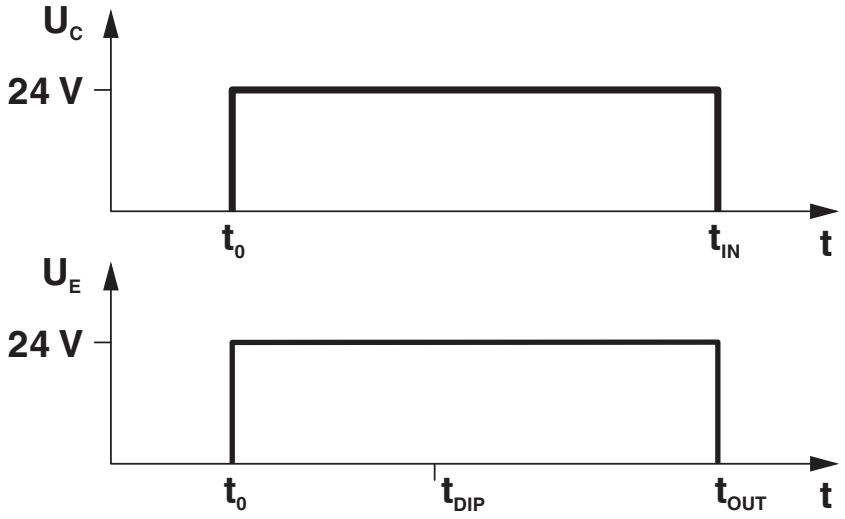

Input pulse t_{IN} ≥ set output pulse t_{DIP}, then input pulse t_{IN} = output pulse t_{OUT} (no restart when triggered again)

Diagram

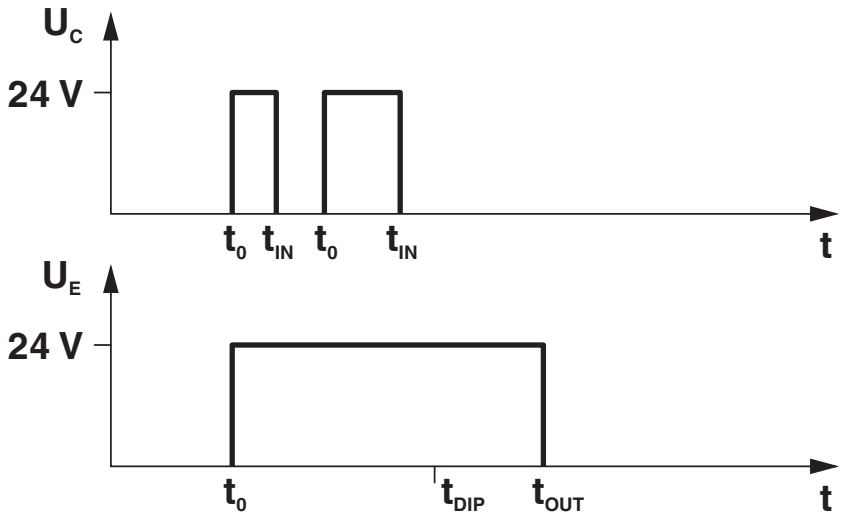

Input pulse t_{IN} < set output pulse t_{DIP} (restart when triggered again)

Circuit diagram

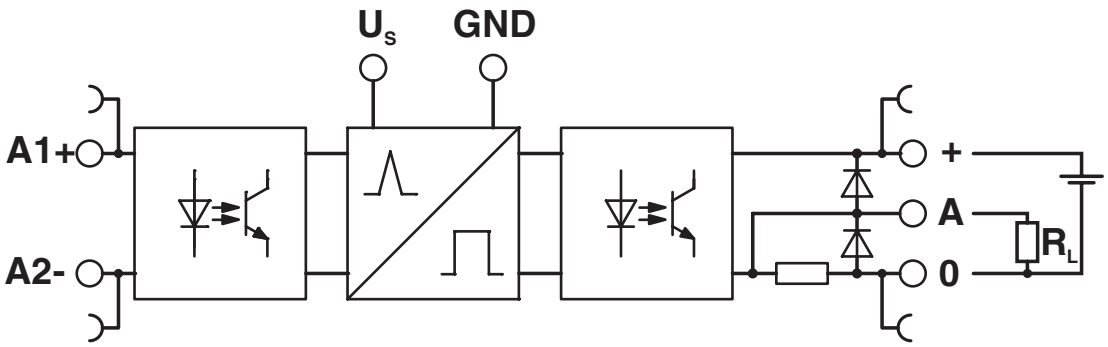

Approvals

To download certificates, visit the product detail page: https://www.phoenixcontact.com/gb/products/2903173

EAC
Approval ID: RU C-DE.A*30.B.01082

EAC
Approval ID: RU*DE.*08.B.01536/19

cULus Listed
Approval ID: E140324

cULus Listed
Approval ID: E140324

cULus Listed
Approval ID: E140324

Classifications

ECLASS

ECLASS-13.0	27371604
ECLASS-15.0	27371604

ETIM

ETIM 10.0	EC001504

UNSPSC

UNSPSC 21.0	39122300

Environmental product compliance

EU RoHS

Fulfills EU RoHS substance requirements	Yes
Exemption	7(a), 7(c)-I

China RoHS

Environment friendly use period (EFUP)	EFUP-50
	An article-related China RoHS declaration table can be found in the download area for the respective article under "Manufacturer declaration". For all articles with EFUP-E, no China RoHS declaration table issued and required.

EU REACH SVHC

REACH candidate substance (CAS No.)	Lead(CAS: 7439-92-1)
SCIP	8bc08110-d020-4612-b35c-ef7d9b5d4ebf

EF3.1 Climate Change

CO2e kg	2.848 kg CO2e

Phoenix Contact 2026 © - all rights reserved
https://www.phoenixcontact.com

PHOENIX CONTACT Ltd
Halesfield 13, Telford
Shropshire, TF7 4PG
01952 681700
info@phoenixcontact.co.uk