# ELR H51-IESSC-24DC500AC-06 - Hybrid motor starter

2902746

https://www.phoenixcontact.com/gb/products/2902746

Please be informed that the data shown in this PDF document is generated from our online catalog. Please find the complete data in the user documentation. Our general terms of use for downloads are valid.



Short-circuit-proof hybrid motor starter for reversing 3~ AC motors up to 550 V AC, with 24 V DC input, 0.6 A output current, emergency stop function and adjustable overload shutdown. Can only be used with EM RD-ADAPTER.

## Your advantages

- 22.5 mm wide
- Safety level in accordance with IEC 61508-1: SIL 3, ISO 13849: PL e
- Reduction in wiring
- Long service life
- Space saving
- Adjustable current for bimetal function
- Low-wear switching

## Commercial data

| | |
|---|---|
| Item number | 2902746 |
| Packing unit | 1 pc |
| Minimum order quantity | 1 pc |
| Sales key | DK7452 |
| Product key | DK7452 |
| GTIN | 4046356673624 |
| Weight per piece (including packing) | 436.84 g |
| Weight per piece (excluding packing) | 350 g |
| Customs tariff number | 85371098 |
| Country of origin | DE |

## Set consists of

### FUSE-10X38-16A-GR - Fuse

2903126

https://www.phoenixcontact.com/gb/products/2903126



Fuse, number: 10 Pcs., fuse type: Fuse (CC), nominal current: 16 A, tripping characteristic: super-fast blow (gR)

# Technical data

## Product properties

| | |
|---|---|
| Product type | Hybrid motor starters |
| Product family | CONTACTRON |
| Operating mode | 100% operating factor |

## Electrical properties

| | |
|---|---|
| Number of phases | 3 |
| Motor starter type | Reversing starter |
| Switching frequency | ≤ 2 Hz (Load-dependent) |
| Maximum power dissipation for nominal condition | 1.7 W |
| Switching frequency | ≤ 2 Hz (Load-dependent) |
| Maximum power dissipation | 2.8 W |
| Minimum power dissipation | 0.88 W |
| Coordination type | 2 |

### Supply

| | |
|---|---|
| Rated control circuit supply voltage $U_S$ | 24 V DC |
| Control supply voltage range | 19.2 V DC ... 30 V DC |
| Rated control supply current $I_S$ | 40 mA |
| Protective circuit | Surge protection |
| | Reverse polarity protection; Parallel polarity protection diode |

### Insulation characteristics

| | |
|---|---|
| Rated insulation voltage | 500 V |
| Rated surge voltage | 6 kV |
| Overvoltage category | III |
| Degree of pollution | 2 |
| Insulation characteristics between the control input and control supply voltage, and auxiliary circuit to the main circuit | Safe isolation (IEC 60947-1) at operating voltage ≤ 300 V AC |
| | Basic insulation (IEC 60947-1) at operating voltage 300 V AC ... 500 V AC |
| Isolation characteristics between the control input and control supply voltage to auxiliary circuit | Safe isolation (IEC 60947-1) in the auxiliary circuit ≤ 300 V AC |

## Input data

### Control

| | |
|---|---|
| Input name | Control input right/left |
| Rated actuating voltage $U_C$ | 24 V DC |
| Triggering voltage range | 19.2 V DC ... 30 V DC |
| Rated actuating current $I_C$ | 5 mA |
| Switching threshold | 9.6 V (“0” signal) |
| | 19.2 V (“1” signal) |
| Switching level | < 5 V DC (For EMERGENCY STOP) |

| | |
|---|---|
| Typical turn-off time | < 30 ms |
| Protective circuit | Reverse polarity protection |

## Output data

AC output

| | |
|---|---|
| Rated operating voltage $U_e$ | 500 V AC |
| Operating voltage range | 42 V AC ... 550 V AC |
| Mains frequency | 50/60 Hz |
| Load current range | 75 mA ... 600 mA (see to derating) |
| Trigger characteristic in acc. with IEC 60947-4-2 | Class 10A |
| Cooling time | 20 min (for auto reset) |
| Leakage current | 0 mA |
| Protective circuit | Surge protection; Varistor |
| | Short-circuit protection; Fuse |

Acknowledge output

| | |
|---|---|
| Note | Confirmation: floating change-over contact, signal contact |
| Contact switching type | 1 changeover contact |
| Switching capacity in accordance with IEC 60947-5-1 | 3 A (230 V, AC15) |
| | 2 A (24 V (DC13)) |

## Connection data

Control circuits

| | |
|---|---|
| Connection method | Screw connection |
| Stripping length | 8 mm |
| Screw thread | M3 |
| Conductor cross-section rigid | 0.2 mm² ... 2.5 mm² |
| Conductor cross-section flexible | 0.2 mm² ... 2.5 mm² |
| Conductor cross-section AWG | 24 ... 14 |
| Tightening torque | 0.5 Nm ... 0.6 Nm |
| | 5 $lb_f$-in. ... 7 $lb_f$-in. |

Load circuit

| | |
|---|---|
| Connection method | Screw connection |
| Stripping length | 8 mm |
| Screw thread | M3 |
| Conductor cross-section rigid | 0.2 mm² ... 2.5 mm² |
| Conductor cross-section flexible | 0.2 mm² ... 2.5 mm² |
| Conductor cross-section AWG | 24 ... 14 |
| Tightening torque | 0.5 Nm ... 0.6 Nm |
| | 5 $lb_f$-in. ... 7 $lb_f$-in. |

## Signaling

| | |
|---|---|
| Status display | LED (yellow) |

| | |
|---|---|
| Operating voltage display | Green LED |
| Error indication | Red LED |

## Dimensions

| | |
|---|---|
| Width | 22.5 mm |
| Height | 160 mm |
| Depth | 114.5 mm |

## Material specifications

| | |
|---|---|
| Flammability rating according to UL 94 (Housing) | V0 (Housing) |

## Environmental and real-life conditions

### Ambient conditions

| | |
|---|---|
| Degree of protection | IP20 |
| Ambient temperature (operation) | -25 °C ... 70 °C (observe derating) |
| Ambient temperature (storage/transport) | -40 °C ... 80 °C |
| Altitude | ≤ 2000 m |

## Approvals

### ATEX

| | |
|---|---|
| Identification | Ⓔx II (2) G [Ex e] [Ex d] [Ex px] |
| | Ⓔx II (2) D [Ex t] [Ex p] |
| Certificate | PTB 12 ATEX 3004 |

### UL approval

| | |
|---|---|
| Certificate | NLDX.E228652 |

### Safety Integrity Level (SIL, IEC 61508)

| | |
|---|---|
| Identification | ≤ 3 |
| Note | Safe shutdown |

### Safety Integrity Level (SIL, IEC 61508)

| | |
|---|---|
| Identification | 2 |
| Note | Motor protection |

### Performance Level (ISO 13849)

| | |
|---|---|
| Identification | e |
| Note | Safe shutdown |

### Category (ISO 13849)

| | |
|---|---|
| Identification | ≤ 3 |
| Note | Safe shutdown |

### CCC

| | |
|---|---|
| Identification | GB/T 14048.6-2016 |
| Certificate | 2020970304000811 |

UL data

| | |
|---|---|
| SCCR | 100 kA (500 V AC (fuse: 30 A class CC/30 A class J (high fault))) |
| | 5 kA (500 V AC (fuse: 20 A RK5 (standard fault))) |
| FLA | 0.6 A (500 V AC) |
| Group installation | 20 A (class RK5, SCCR 5kA, #24 - 14 AWG max. solid and stranded) |
| | 30 A (class CC or J, SCCR 100kA, #24 - 14 AWG max, solid and stranded) |
| Category code | NLDX / NRNT |

## Standards and regulations

Standards/regulations

| | |
|---|---|
| Standards/regulations | IEC 60947-1 |
| | EN 60947-4-2 |
| | IEC 61508 |
| | ISO 13849 |

## Mounting

| | |
|---|---|
| Mounting type | Bus bar mounting |
| | DIN rail mounting |
| Assembly note | alignable, for spacing see derating |
| Mounting position | vertical (horizontal DIN rail, motor output below) |

## Drawings

Block diagram

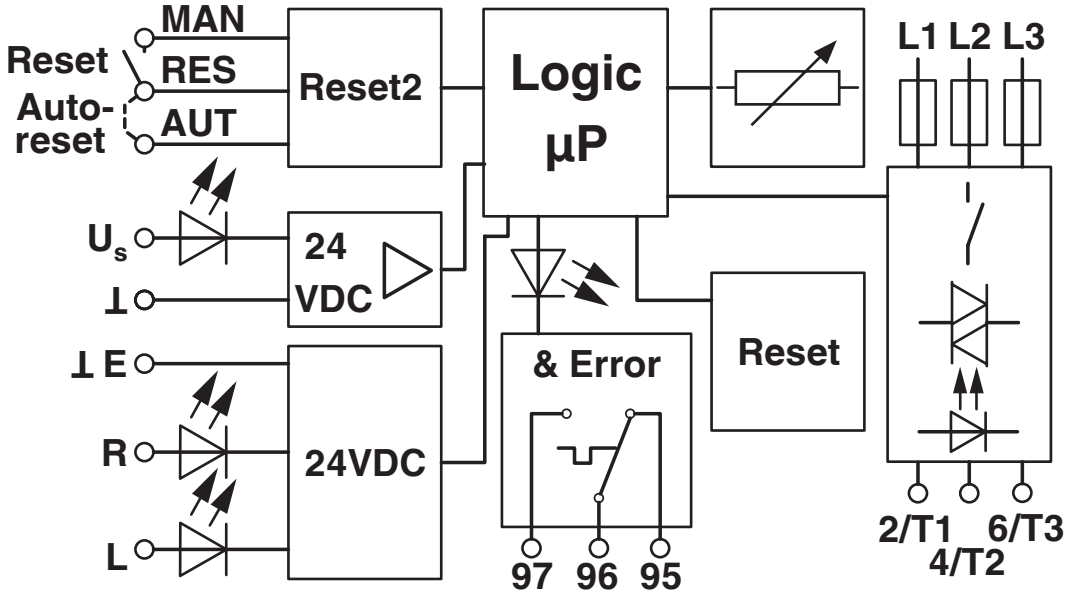

## Approvals

To download certificates, visit the product detail page: https://www.phoenixcontact.com/gb/products/2902746

**IECEE CB Scheme**
Approval ID: DE1-60642

**UL Listed**
Approval ID: E228652

**cUL Listed**
Approval ID: E228652

**CCC**
Approval ID: 2024010304672815

**ATEX**
Approval ID: PTB 12 ATEX 3004

## Classifications

### ECLASS

| | |
|---|---|
| ECLASS-13.0 | 27370905 |
| ECLASS-15.0 | 27370905 |
| ECLASS-15.0 ASSET | 27250101 |

### ETIM

| | |
|---|---|
| ETIM 10.0 | EC001037 |

### UNSPSC

| | |
|---|---|
| UNSPSC 21.0 | 25173900 |

## Environmental product compliance

EU RoHS

| | |
|---|---|
| Fulfills EU RoHS substance requirements | Yes |
| Exemption | 7(a), 7(a)-I, 7(c)-I |

China RoHS

| | |
|---|---|
| Environment friendly use period (EFUP) | EFUP-50 |
| | An article-related China RoHS declaration table can be found in the download area for the respective article under "Manufacturer declaration". For all articles with EFUP-E, no China RoHS declaration table issued and required. |

EU REACH SVHC

| | |
|---|---|
| REACH candidate substance (CAS No.) | 1-Methyl-2-pyrrolidone (NMP)(CAS: 872-50-4) |
| | Lead(CAS: 7439-92-1) |
| SCIP | e20a3afa-fa2c-40f8-9861-db69c9ebd4bb |


Phoenix Contact 2026 © - all rights reserved
https://www.phoenixcontact.com



PHOENIX CONTACT Ltd
Halesfield 13, Telford
Shropshire, TF7 4PG
01952 681700
info@phoenixcontact.co.uk