PSR-SCP-42-48UC/ESAM4/3X1/1X2B - Safety relays

2901416

https://www.phoenixcontact.com/gb/products/2901416

Please be informed that the data shown in this PDF document is generated from our online catalog. Please find the complete data in the user documentation. Our general terms of use for downloads are valid.



The figure shows 48 V AC/DC

Safety relay for emergency stop and safety door monitoring up to SIL 3 or Cat. 4, PL e in accordance with EN ISO 13849, 1- or 2-channel operation, 3 enabling current paths, nominal input voltage: 42 V AC/DC ... 48 V AC/DC, plug-in screw terminal blocks

Your advantages

- Up to Cat. 4/PL e in accordance with EN ISO 13849-1, SIL 3 in accordance with EN IEC 62061, SIL 3 in accordance with IEC 61508
- Manually monitored and automatic activation in a single device
- Basic insulation
- 1- and 2-channel control
- 3 enabling current paths, 1 signaling current path

Commercial data

Item number	2901416
Packing unit	1 pc
Minimum order quantity	1 pc
Sales key	DNA114
Product key	DNA114
GTIN	4046356591997
Weight per piece (including packing)	238.01 g
Weight per piece (excluding packing)	177.75 g
Customs tariff number	85371098
Country of origin	DE

Technical data

Product properties

Product type	Safety relays
Product family	PSRclassic
Application	Emergency stop
	Safety door
Control	1 and 2 channel
Mechanical service life	approx. 10^7 cycles
Relay type	Electromechanical relay with force-guided contacts in accordance with IEC/EN 61810-3

Insulation characteristics: Air clearances and creepage distances between the power circuits

Overvoltage category	III
Degree of pollution	2

Electrical properties

Maximum power dissipation for nominal condition	4.56 W
Nominal operating mode	100% operating factor

Air clearances and creepage distances between the power circuits

Rated insulation voltage	250 V AC
Rated surge voltage/insulation	4 kV / basic insulation (safe isolation, reinforced insulation, and 6 kV between A1-A2/logic/enabling and signaling current paths)

Input data

General

Control supply voltage range	42 V AC/DC ... 48 V AC/DC -15 % ... +10 % (Rated control circuit supply voltage U_S)
Rated control supply current I_S	95 mA
Typical input current at U_N	95 mA
Voltage at input/start and feedback circuit	~ 24 V DC
Typical response time	40 ms (man. start)
Typ. starting time with U_s	330 ms (when controlled via A1)
Typical release time	90 ms (when controlled via A1)
	20 ms (when controlled via S11/S12 and S21/S22)
Concurrence	∞
Recovery time	1 s
Maximum switching frequency	0.5 Hz
Protective circuit	Surge protection; Varistor 275 V_{RMS} (A1-A2)
	Surge protection; Varistor
Max. permissible overall conductor resistance	50 Ω
Operating voltage display	Green LED
Status display	LED (green)

Output data

Contact switching type	3 enabling current paths
	1 signaling current path
Contact material	$AgSnO_2$, + 0.2 µm Au
Maximum switching voltage	250 V AC/DC
Minimum switching voltage	10 V AC/DC
Limiting continuous current	6 A (Enabling current paths)
	5 A (Signaling current path)
Maximum inrush current	6 A
Inrush current, minimum	10 mA
Sq. Total current	72 A^2 ($I_{TH}^2 = I_1^2 + I_2^2 + I_3^2$)
Interrupting rating (ohmic load) max.	144 W (24 V DC, τ = 0 ms)
	230 W (48 V DC, τ = 0 ms)
	68 W (110 V DC, τ = 0 ms)
	88 W (220 V DC, τ = 0 ms)
	2000 VA (250 V AC, τ = 0 ms)
Maximum interrupting rating (inductive load)	48 W (24 V DC, τ = 40 ms)
	40 W (48 V DC, τ = 40 ms)
	35 W (110 V DC, τ = 40 ms)
	33 W (220 V DC, τ = 40 ms)
Switching power min.	100 mW
Switching capacity (360/h cycles)	6 A (24 V DC)
	5 A (230 V AC)
Switching capacity (3600/h cycles)	3 A (24 V (DC13))
	3 A (230 V (AC 15))
Output fuse	10 A gL/gG NEOZED (Enabling current paths)
	6 A gL/gG NEOZED (Signaling current path)

Connection data

Connection technology

pluggable	yes

Conductor connection

Connection method	Screw connection
Conductor cross-section rigid	0.2 mm² ... 2.5 mm²
Conductor cross-section flexible	0.2 mm² ... 2.5 mm²
Conductor cross-section AWG	24 ... 12

Dimensions

Width	22.5 mm
Height	99 mm
Depth	114.5 mm

Material specifications

Housing material	PA

Characteristics

Safety data

Stop category (EN 60204-1)	0 (Undelayed contacts)

Safety data: EN ISO 13849

Performance level (PL)	e

Safety data: IEC 61508 - High demand

Safety Integrity Level (SIL)	3

Safety data: IEC 61508 - Low demand

Safety Integrity Level (SIL)	3

Safety data: EN IEC 62061

Safety Integrity Level (SIL)	3

Environmental and real-life conditions

Ambient conditions

Degree of protection	IP20
Min. degree of protection of inst. location	IP54
Ambient temperature (operation)	-25 °C ... 55 °C
Ambient temperature (storage/transport)	-40 °C ... 85 °C
Maximum altitude	≤ 2000 m (Above sea level)
Max. permissible humidity (storage/transport)	75 % (on average, 85% infrequently, non-condensing)
Max. permissible relative humidity (operation)	75 % (on average, 85% infrequently, non-condensing)
Shock	15g
Vibration (operation)	10 Hz ... 150 Hz, 2g

Standards and regulations

Air clearances and creepage distances between the power circuits

Standards/regulations	IEC 60664-1

Mounting

Mounting type	DIN rail mounting
Mounting position	any

Drawings

Application drawing

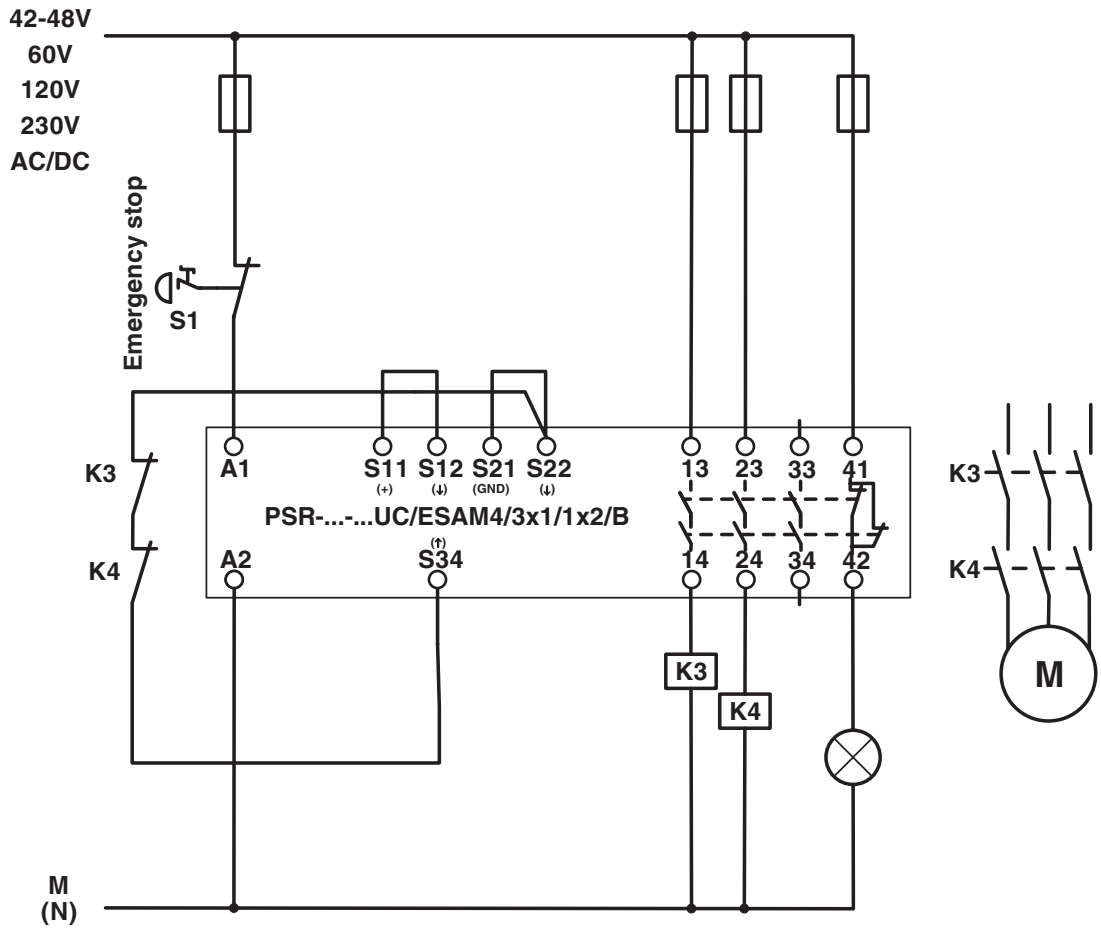

Single-channel emergency stop monitoring

Application drawing

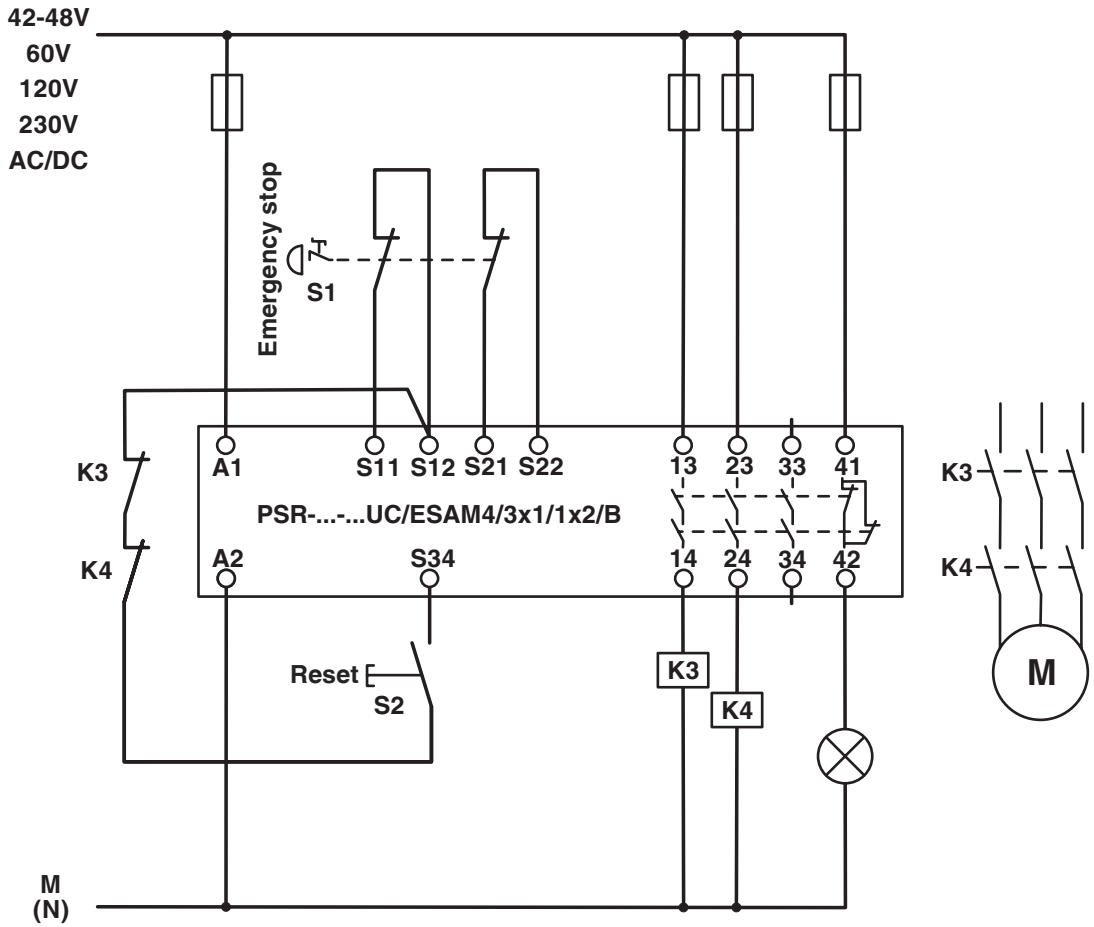

2-channel emergency stop monitoring

Circuit diagram

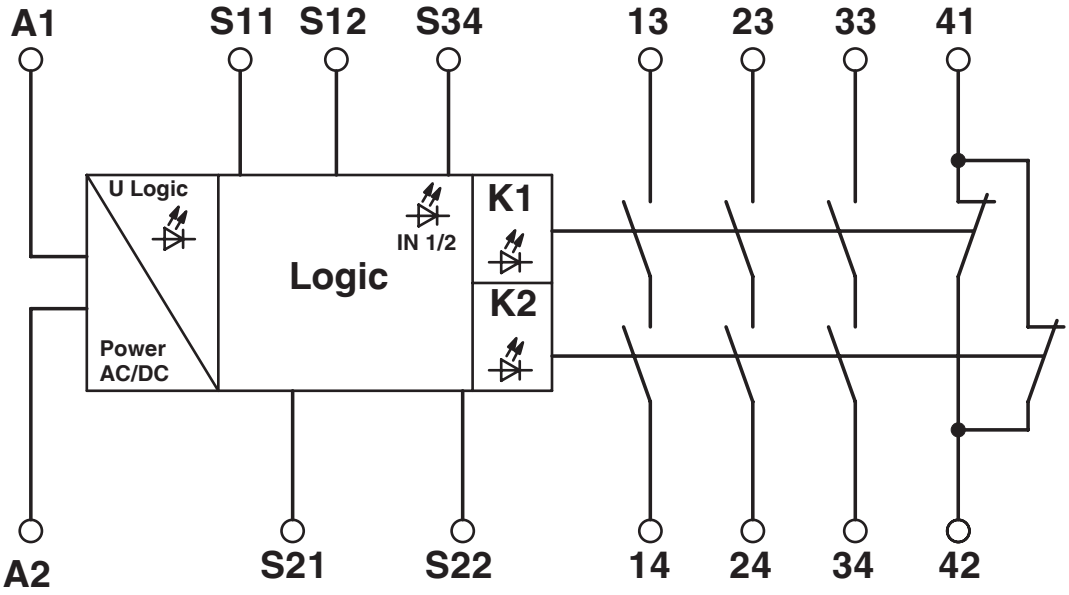

Block diagram

Classifications

UNSPSC

UNSPSC 21.0	39122200

Environmental product compliance

EU RoHS

Fulfills EU RoHS substance requirements	Yes
Exemption	7(a), 7(c)-I

China RoHS

Environment friendly use period (EFUP)	EFUP-50
	An article-related China RoHS declaration table can be found in the download area for the respective article under "Manufacturer declaration". For all articles with EFUP-E, no China RoHS declaration table issued and required.

EU REACH SVHC

REACH candidate substance (CAS No.)	Lead(CAS: 7439-92-1)
SCIP	13f4a7fb-a678-46ba-b805-d69d47675dbd

Phoenix Contact 2026 © - all rights reserved
https://www.phoenixcontact.com

PHOENIX CONTACT Ltd
Halesfield 13, Telford
Shropshire, TF7 4PG
01952 681700
info@phoenixcontact.co.uk