PSR-SCP- 24UC/ESAM4/3X1/1X2/B - Safety relays

2900509

https://www.phoenixcontact.com/gb/products/2900509

Please be informed that the data shown in this PDF document is generated from our online catalog. Please find the complete data in the user documentation. Our general terms of use for downloads are valid.



Safety relay for emergency stop and safety door monitoring up to SIL 3 or Cat. 4, PL e in accordance with EN ISO 13849, 2-channel operation, 3 enabling current paths, nominal input voltage: 24 V DC, plug-in screw terminal block

Your advantages

- Up to Cat. 4/PL e in accordance with EN ISO 13849-1, SIL 3 in accordance with EN IEC 62061, SIL 3 in accordance with IEC 61508
- Manually monitored and automatic activation in a single device
- Basic insulation
- 2 channel control
- 3 enabling current paths, 1 signaling current path

ELEKTROGERÄTE RÜCKNAHME

Commercial data

Item number	2900509
Packing unit	1 pc
Minimum order quantity	1 pc
Sales key	DNA114
Product key	DNA114
GTIN	4046356513579
Weight per piece (including packing)	185 g
Weight per piece (excluding packing)	161.1 g
Customs tariff number	85371098
Country of origin	DE

Technical data

Product properties

Product type	Safety relays
Product family	PSRclassic
Application	Emergency stop
	Safety door
Set comprises	1449149 PSR-SCP- 24UC/ESAM4/3X1/1X2/B-SET10
Control	2-channel
Mechanical service life	approx. 10^7 cycles
Relay type	Electromechanical relay with force-guided contacts in accordance with IEC/EN 61810-3

Insulation characteristics

Overvoltage category	III
Degree of pollution	2

Times

Typical response time	typ. 150 ms (For U_s autostart)
	typ. 100 ms (For U_s manual, monitored start)
Typ. starting time with U_s	typ. 250 ms (with Us / when controlled via A1)
Typical release time	typ. 20 ms (At Us on demand via sensor circuit)
	typ. 45 ms (At Us/on demand via A1)
Restart time	< 1 s (Boot time)
Recovery time	< 1 s (following demand of the safety function)
Start pulse length	≥ 500 ms (manual start)

Electrical properties

Maximum power dissipation for nominal condition	16.44 W (U_S = 26.4 V, I_L^2 = 72 A², $P_{Total\ max}$ = 2.04 W + 14.4 W)
Nominal operating mode	100% operating factor
Rated insulation voltage	250 V
Rated surge voltage/insulation	See data sheet, section “Insulation coordination”.

Supply

Rated control circuit supply voltage U_S	24 V DC -15 % / +10 %
Rated control supply current I_S	typ. 70 mA (at U_S)
Power consumption at U_S	typ. 1.68 W
Inrush current	< 3.5 A (typ. with U_S, Δt = 3 ms)
Filter time	5 ms (in the event of voltage dips at U_s)
Protective circuit	Serial protection against polarity reversal; Suppressor diode

Input data

Digital: Logic (S12, S22)

Description of the input	safety-related
Number of inputs	2

Input voltage range "0" signal	0 V DC ... 5 V DC (S12)
Input voltage range "1" signal	20.4 V ... 26.4 V (S12)
Input current range "0" signal	0 mA ... 2 mA
Inrush current	< 100 mA (Δt = 500 ms, with U_s/I_x at S12)
	> -100 mA (Δt = 300 ms, with U_s/I_x at S22)
Filter time	No test pulses permitted
Concurrence	∞
Max. permissible overall conductor resistance	50 Ω
Protective circuit	Suppressor diode
Current consumption	38 mA (typ. with U_S at S12)
	-38 mA (typ. with U_S at S22)

Digital: Start circuit (S34, S35)

Description of the input	non-safety-related
Number of inputs	2
Input voltage range "1" signal	20.4 V ... 26.4 V
Inrush current	< 6 mA (typ. with U_S at S34/35)
Filter time	No test pulses permitted
Max. permissible overall conductor resistance	50 Ω
Protective circuit	Suppressor diode
Current consumption	0 mA (typ. with U_S at S34)
	1 mA (typ. with U_S at S35)

Output data

Relay: Enabling current paths (13/14, 23/24, 33/34)

Output description	2 N/O contacts in series, safety-related, floating
Number of outputs	3
Contact switching type	3 enabling current paths
Contact material	$AgSnO_2$
Switching voltage	min. 10 V AC/DC
	max. 250 V AC/DC
Switching power	min. 100 mW
Inrush current	min. 10 mA
	max. 6 A
Switching capacity	5 A (AC15)
	6 A (DC13)
Limiting continuous current	6 A
Sq. Total current	72 A^2 (observe derating)
Switching frequency	max. 0.5 Hz
Mechanical service life	10^7 cycles
Output fuse	10 A gL/gG (High demand)
	4 A gL/gG (Low demand)

Relay: Signaling current path (41/42)

Output description	2 N/C contacts parallel, non-safety-related, floating
Number of outputs	1
Contact switching type	1 signaling current path
Contact material	$AgSnO_2$
Switching voltage	min. 10 V AC/DC
	max. 250 V AC/DC
Switching power	min. 100 mW
Inrush current	min. 10 mA
	max. 6 A
Switching capacity	1.5 A (AC15)
	2 A (DC13)
Limiting continuous current	6 A (Signaling current path)
Sq. Total current	36 A^2
Switching frequency	max. 0.5 Hz
Interrupting rating (ohmic load) max.	Observe derating and load limit curve
Output fuse	6 A gL/gG

Connection data

Connection technology

pluggable	yes

Conductor connection

Connection method	Screw connection
Conductor cross-section rigid	0.2 mm² ... 2.5 mm²
Conductor cross-section flexible	0.2 mm² ... 2.5 mm²
Conductor cross-section AWG	24 ... 12
Stripping length	7 mm
Screw thread	M3
Tightening torque	0.5 Nm ... 0.6 Nm

Signaling

Status display	3 x LED (green)
Operating voltage display	1 x LED (green)

Dimensions

Width	22.5 mm
Height	99 mm
Depth	114.5 mm

Material specifications

Color (Housing)	yellow (RAL 1018)
Housing material	PA

Characteristics

Safety data

Stop category (EN 60204-1)	0

Safety data: EN ISO 13849

Performance level (PL)	e (5 A DC13; 5 A AC15; 8760 switching cycles/year)

Safety data: IEC 61508 - High demand

Safety Integrity Level (SIL)	3

Safety data: IEC 61508 - Low demand

Safety Integrity Level (SIL)	3

Safety data: EN IEC 62061

Safety Integrity Level (SIL)	3

Environmental and real-life conditions

Ambient conditions

Degree of protection	IP20
Min. degree of protection of inst. location	IP54
Ambient temperature (operation)	-20 °C ... 55 °C (observe derating)
Ambient temperature (storage/transport)	-40 °C ... 70 °C
Maximum altitude	≤ 2000 m (Above sea level)
Max. permissible humidity (storage/transport)	75 % (on average, 85% infrequently, non-condensing)
Max. permissible relative humidity (operation)	75 % (on average, 85% infrequently, non-condensing)
Shock	15g
Vibration (operation)	10 Hz ... 150 Hz, 2g

Approvals

CE

Identification	CE-compliant

Mounting

Mounting type	DIN rail mounting
Assembly note	See derating curve
Mounting position	vertical or horizontal

Drawings

Circuit diagram

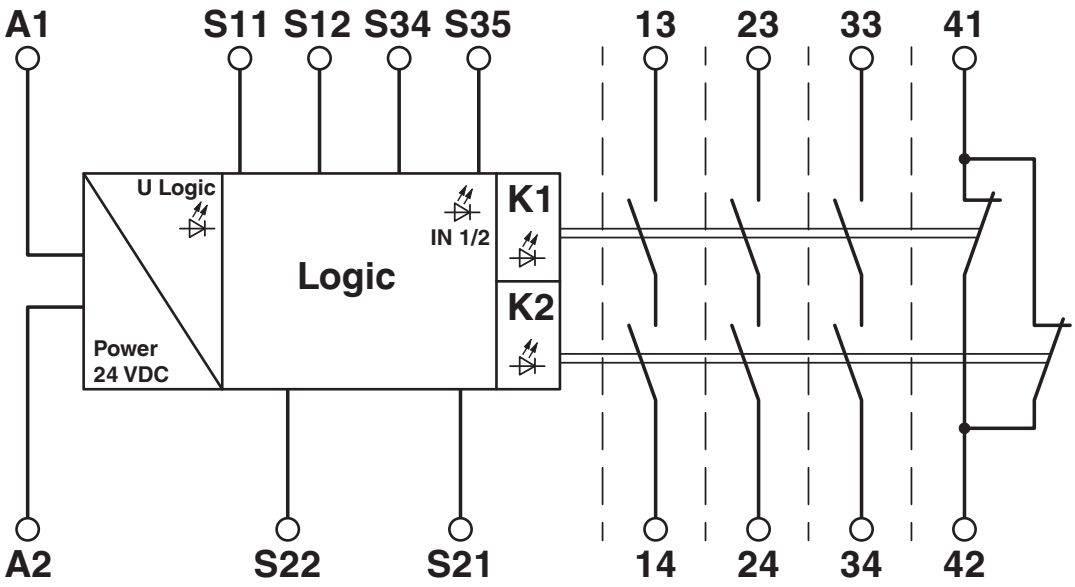

Block diagram

Circuit diagram

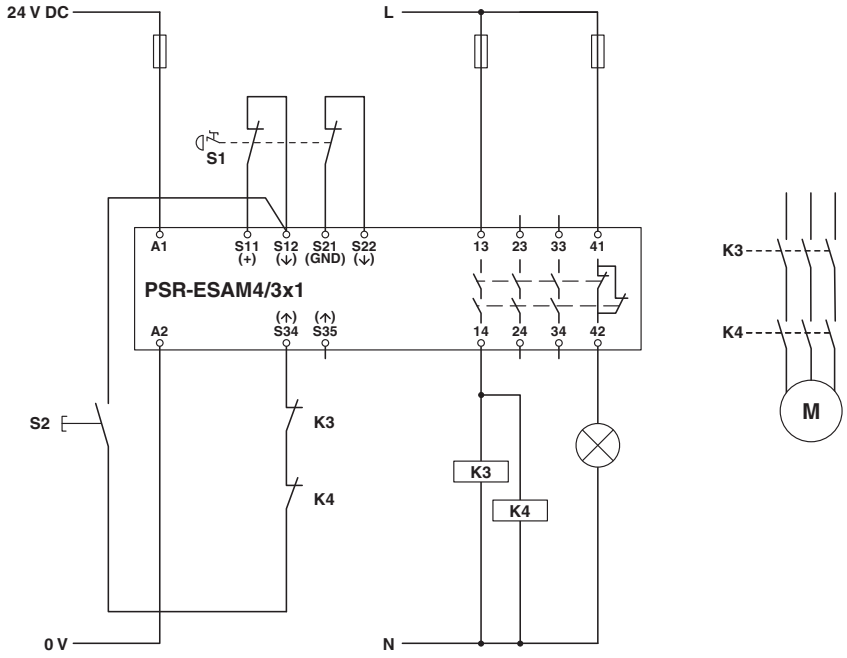

2-channel emergency stop monitoring

Approvals

To download certificates, visit the product detail page: https://www.phoenixcontact.com/gb/products/2900509

cULus Listed
Approval ID: E140324

Functional Safety
Approval ID: 01/205/5117.04/23

cULus Listed
Approval ID: E140324

Functional Safety
Approval ID: 01/205/5117.04/23

Classifications

ECLASS

ECLASS-13.0	27371819
ECLASS-15.0	27371819
ECLASS-15.0 ASSET	27250101

ETIM

ETIM 10.0	EC001449

UNSPSC

UNSPSC 21.0	39122205

Environmental product compliance

EU RoHS

Fulfills EU RoHS substance requirements	Yes
Exemption	7(a), 7(c)-I

China RoHS

Environment friendly use period (EFUP)	EFUP-50
	An article-related China RoHS declaration table can be found in the download area for the respective article under "Manufacturer declaration". For all articles with EFUP-E, no China RoHS declaration table issued and required.

EU REACH SVHC

REACH candidate substance (CAS No.)	Lead(CAS: 7439-92-1)
SCIP	c5628219-0111-45f5-ad67-02317d0643d9

EF3.1 Climate Change

CO2e kg	5.021 kg CO2e

Phoenix Contact 2026 © - all rights reserved
https://www.phoenixcontact.com

PHOENIX CONTACT Ltd
Halesfield 13, Telford
Shropshire, TF7 4PG
01952 681700
info@phoenixcontact.co.uk