IL EIP BK DI8 DO4 2TX-PAC - Bus coupler

2897758

https://www.phoenixcontact.com/gb/products/2897758

Please be informed that the data shown in this PDF document is generated from our online catalog. Please find the complete data in the user documentation. Our general terms of use for downloads are valid.



Inline, Bus coupler, EtherNet/IP™, RJ45 jack, Digital inputs: 8, 24 V DC, connection technology: 3-conductor, Digital outputs: 4, 24 V DC, 500 mA, connection technology: 3-conductor, transmission speed in the local bus: 500 kbps / 2 Mbps, degree of protection: IP20, including Inline connectors and marking fields

Product description

The bus coupler with integrated I/Os is intended for use within an EtherNet/IP™ network and represents the link to the Inline I/O system. Up to 61 Inline devices can be connected to the bus coupler. The bus coupler supports a maximum of 8 PCP devices. A corresponding EDS file is available for integrating the Inline station into the programming system. This file can be downloaded via the product at www.phoenixcontact.com/products.

Your advantages

- 8 digital inputs, 4 digital outputs (on-board)
- EtherNet/IP™, Version 1.2
- Web-based management
- 2 RJ45 connections
- Automatic detection of the transmission speed in the local bus (500 kbps or 2 Mbps)

ELEKTROGERÄTE RÜCKNAHME

Commercial data

Item number	2897758
Packing unit	1 pc
Minimum order quantity	1 pc
Sales key	DRI11D
Product key	DRI11D
GTIN	4046356157926
Weight per piece (including packing)	335 g

Weight per piece (excluding packing)	320 g
Customs tariff number	85176200
Country of origin	DE

Technical data

Dimensions

Dimensional drawing	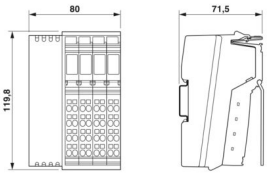
Width	80 mm
Height	119.8 mm
Depth	71.5 mm
Note on dimensions	Specfications with connectors

Notes

Note on application

Note on application	Only for industrial use

Utilization restriction

CCCex note	Use in potentially explosive areas is not permitted in China.

Mounting

Mounting type	DIN rail mounting

Material specifications

Color (Housing)	green (RAL 6021)

Interfaces

EtherNet/IP™

Number of interfaces	2
Connection method	RJ45 jack
Note on the connection method	Auto negotiation and autocrossing
Permissible conductor cross-section	0.14 mm² ... 0.22 mm² (twisted pair)
Transmission speed	10/100 Mbps (half or full duplex (automatic detection))
Transmission physics	Ethernet in RJ45 twisted pair

Inline local bus

Number of interfaces	1
Connection method	Inline data jumper
Transmission speed	500 kbps / 2 Mbps (automatic detection, no combined system)

Fieldbus: Local bus gateway

Max. number of local bus devices	61 (The on-board I/Os are two devices)

System properties

System limits

Amount of process data (Input data)	max. 504 Byte
Amount of process data (Output data)	max. 504 Byte
Number of supported devices	max. 63 (per station)
Number of local bus devices that can be connected	max. 61 (The on-board I/Os are two devices)
Number of devices with parameter channel	max. 8
Number of supported branch terminals with remote bus branch	0

Programming data

Input address area	8 bit
Output address area	4 bit
Register length (bus)	16 bit
Register length (master)	512 Byte

Input data

Digital:

Input name	Digital inputs
Description of the input	EN 61131-2 type 1
Number of inputs	8
Connection method	Inline connector
Connection technology	3-conductor
Input voltage	24 V DC
Input voltage range "0" signal	-30 V DC ... 5 V DC
Input voltage range "1" signal	15 V DC ... 30 V DC
Nominal input voltage U_{IN}	24 V DC
Nominal input current at U_{IN}	typ. 3 mA
Current flow	Limited to 3 mA, maximum
Permissible conductor length to the sensor	100 m
Typical input current per channel	typ. 3 mA
Typical response time	approx. 500 µs
Delay at signal change from 0 to 1	1.2 ms
Delay at signal change from 1 to 0	1.2 ms
Protective circuit	Reverse polarity protection; Suppressor diode

Output data

Digital:

Output name	Digital outputs
Connection method	Inline connector
Connection technology	3-conductor
Number of outputs	4
Protective circuit	Short-circuit and overload protection; Free running circuit

Output voltage	24 V DC -1 V (At nominal current)
Limitation of the voltage induced on circuit interruption	approx. -30 V
Max. current carrying capacity per output	max. 500 mA
Maximum output current per module	max. 2 A
Nominal output voltage	24 V DC
Output current when switched off	max. 10 µA (When not loaded, a voltage can be measured even at an output that is not set.)
Nominal load, inductive	12 VA (1.2 H, 48 Ω)
Nominal load, lamp	12 W
Nominal load, ohmic	12 W
Signal delay when switching off an ohmic nominal load	max. 250 µs (in the case of 0.5 A load)
Signal delay when switching on an ohmic nominal load	max. 50 µs (in the case of 0.5 A load)
Maximum operating frequency with inductive nominal load	0.5 Hz (1.2 H, 48 Ω)
Behavior with overload	Auto restart
Behavior with inductive overload	Output can be destroyed
Behavior at voltage switch-off	The output follows the power supply without delay
Reverse voltage resistance to short pulses	Reverse voltage proof
Resistance to permanent reverse voltage	max. 2 A
Signal delay	typ. 1.2 ms
Overcurrent shut-down	min. 0.7 A

Product properties

Product type	I/O component
Product family	Inline
Type	modular
Scope of supply	including Inline connectors and marking fields
No. of channels	12
Diagnostics messages	Short-circuit or overload of the digital outputs yes
	Sensor supply failure yes
	Failure of the actuator supply yes

Insulation characteristics

Overvoltage category	II (IEC 60664-1, EN 60664-1)
Pollution degree	2 (IEC 60664-1, EN 60664-1)

Electrical properties

Maximum power dissipation for nominal condition	6.3 W
Power dissipation	typ. 1.7 W (entire device)

Potentials

Protective circuit	Short-circuit protection of the communications power; electronic
	Short-circuit protection of the analog supply; electronic

Potentials: Bus coupler supply U_{BK}; Communications power U_L (7.5 V) and the analog supply U_{ANA} (24 V) are generated from the bus coupler supply.

Supply voltage	24 V DC (via Inline connector)

Supply voltage range	19.2 V DC ... 30 V DC (including all tolerances, including ripple)
Current draw	max. 0.98 A (with max. number of connected I/O terminal blocks)
	80 mA (without connected I/O terminal blocks)

Potentials: Communications power (U_L)

Supply voltage	7.5 V DC
Power supply	max. 0.8 A DC

Potentials: Supply of analog modules (U_{ANA})

Supply voltage	24 V DC
Supply voltage range	19.2 V DC ... 30 V DC (including all tolerances, including ripple)
Power supply	max. 0.5 A DC

Potentials: Main circuit supply (U_M)

Supply voltage	24 V DC (via Inline connector)
Supply voltage range	19.2 V DC ... 30 V DC (including all tolerances, including ripple)
Power supply	max. 8 A DC (sum of U_M + U_S)
Current draw	max. 8 A DC
	min. 3 mA (without connected peripherals)

Potentials: Segment circuit supply (U_S)

Supply voltage	24 V DC (via Inline connector)
Supply voltage range	19.2 V DC ... 30 V DC (including all tolerances, including ripple)
Power supply	max. 8 A DC (sum of U_M + U_S)
Current draw	max. 8 A DC
	min. 6 mA (without connected peripherals)

Connection data

Connection technology

Connection name	Inline connector

Inline connector

Connection method	Spring-cage connection
Conductor cross-section, rigid	0.08 mm² ... 1.5 mm²
Conductor cross-section, flexible	0.08 mm² ... 1.5 mm²
Conductor cross-section AWG	28 ... 16
Stripping length	8 mm

Environmental and real-life conditions

Ambient conditions

Ambient temperature (operation)	-25 °C ... 60 °C
Degree of protection	IP20
Air pressure (operation)	70 kPa ... 106 kPa (up to 3000 m above sea level)
Air pressure (storage/transport)	70 kPa ... 106 kPa (up to 3000 m above sea level)
Ambient temperature (storage/transport)	-25 °C ... 85 °C

Permissible humidity (operation)	10 % ... 95 % (non-condensing)
Permissible humidity (storage/transport)	10 % ... 95 % (non-condensing)

Mechanical test

Vibration resistance in accordance with EN 60068-2-6/IEC 60068-2-6	5g
Shock in accordance with EN 60068-2-27/IEC 60068-2-27	25g

Standards and regulations

Protection class	III (IEC 61140, EN 61140, VDE 0140-1)

Drawings

Dimensional drawing

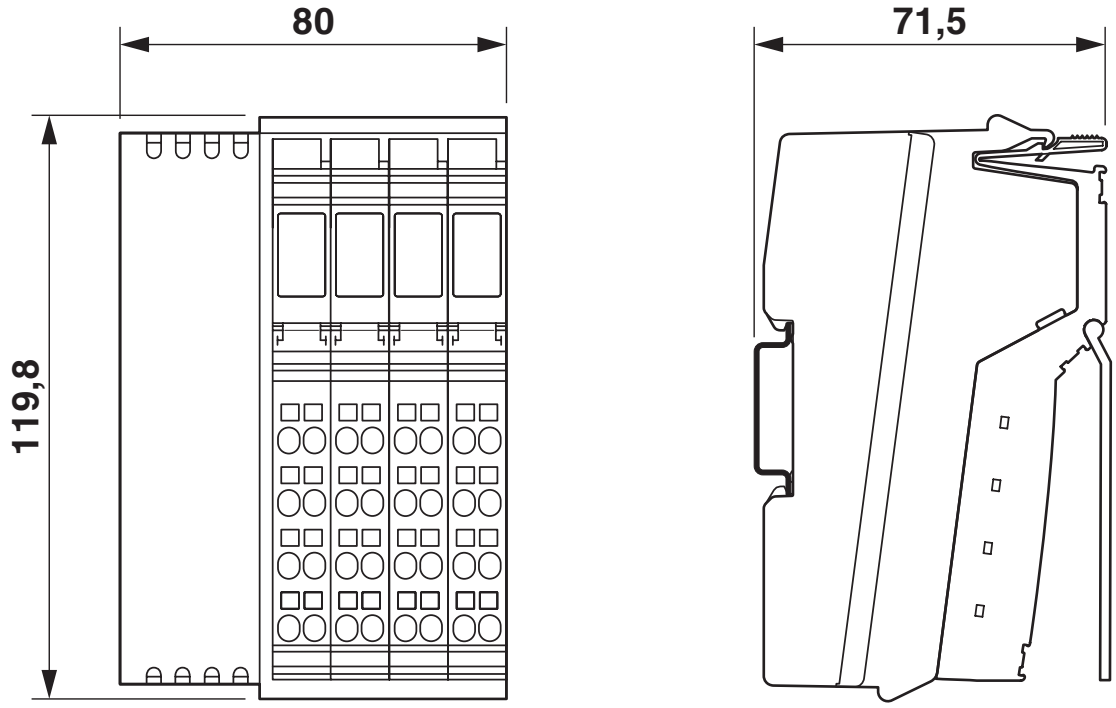

Dimensional drawing

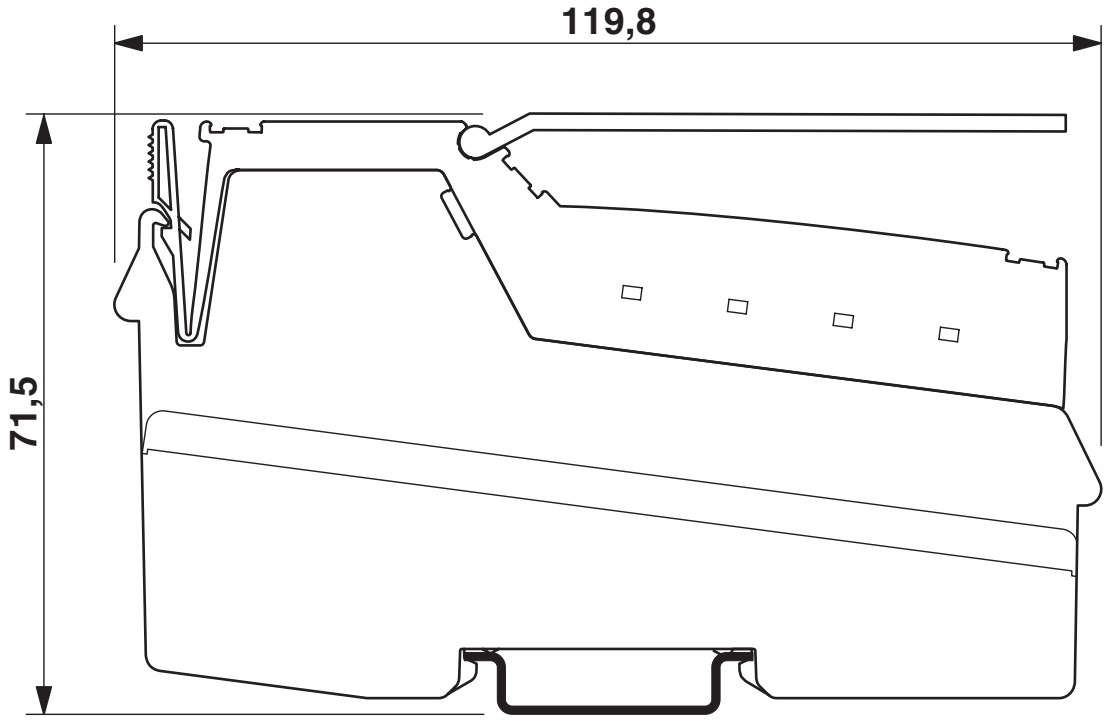

Connection diagram

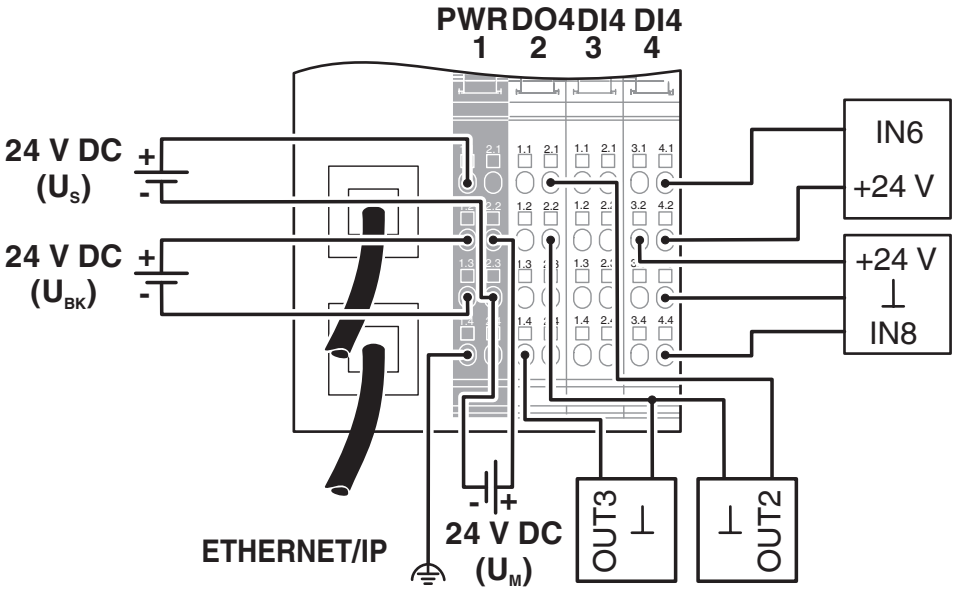

Approvals

To download certificates, visit the product detail page: https://www.phoenixcontact.com/gb/products/2897758

cULus Recognized
Approval ID: E140324

cULus Listed
Approval ID: E199827

Classifications

ECLASS

ECLASS-13.0	27242608
ECLASS-15.0	27242608

ETIM

ETIM 10.0	EC001604

UNSPSC

UNSPSC 21.0	32151600

Environmental product compliance

EU RoHS

Fulfills EU RoHS substance requirements	Yes
Exemption	7(a), 7(a)-I, 7(c)-I

China RoHS

Environment friendly use period (EFUP)	EFUP-50
	An article-related China RoHS declaration table can be found in the download area for the respective article under "Manufacturer declaration". For all articles with EFUP-E, no China RoHS declaration table issued and required.

EU REACH SVHC

REACH candidate substance (CAS No.)	Lead(CAS: 7439-92-1)
SCIP	c9ea031a-2e0d-4b7b-8afb-6e9d51041fae

Phoenix Contact 2026 © - all rights reserved
https://www.phoenixcontact.com

PHOENIX CONTACT Ltd
Halesfield 13, Telford
Shropshire, TF7 4PG
01952 681700
info@phoenixcontact.co.uk