D-UFB-PB - Surge protection device

2880642

https://www.phoenixcontact.com/gb/products/2880642

Please be informed that the data shown in this PDF document is generated from our online catalog. Please find the complete data in the user documentation. Our general terms of use for downloads are valid.

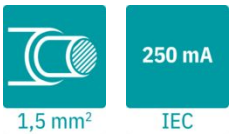

Fine surge protection in a 9-pos. D-SUB plug for PROFIBUS-DP applications with a transmission speed of up to 12 Mbps.



Your advantages

- Space saving with use directly at the interface
- Can be in applications up to 12 Mbps with adapted protective circuit
- Adjustment of the transmission properties with switchable termination resistor

ELEKTROGERÄTE RÜCKNAHME

Commercial data

Item number	2880642
Packing unit	1 pc
Minimum order quantity	1 pc
Sales key	CL3113
Product key	CL3113
GTIN	4046356048989
Weight per piece (including packing)	52.8 g
Weight per piece (excluding packing)	52.8 g

Customs tariff number	85363010
Country of origin	DE

Technical data

Product properties

Product type	Surge protection for information technology
Product family	DATATRAB
IEC test classification	C1
	C3
	B2
VDE requirement class	C1
	C3
	B2
Type	Connecting plug
Number of positions	4
Surge protection fault message	none
Pin assignment	3, 5, 6, 8

Insulation characteristics

Overvoltage category	II
Pollution degree	2

Connection data

D-SUB connection

Connection method	D-SUB connector

PCB connection

Connection method	Screw connection
Stripping length	5 mm
Conductor cross-section, rigid min.	0.14 mm²
Conductor cross-section, rigid max.	1.5 mm²
Conductor cross-section flexible min.	0.14 mm²
Conductor cross-section flexible max.	1 mm²
Conductor cross-section AWG min.	26
Conductor cross-section AWG max.	16
Connection method	Screw connection & D-SUB-9
Screw thread	M2
Tightening torque	0.25 Nm
Conductor cross-section flexible	0.14 mm² ... 1.5 mm²
Conductor cross-section rigid	0.14 mm² ... 1.5 mm²
Conductor cross-section AWG	26 ... 16

Dimensions

Dimensional drawing	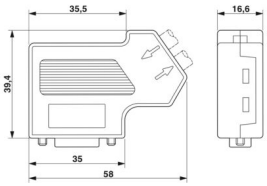
Width	44.5 mm
Height	58 mm
Depth	16.6 mm

External dimensions

External diameter min.	7.6 mm
External diameter max.	8.4 mm

Material specifications

Color	silver-colored
Housing material	ABS, metal-plated

Mechanical properties

Mechanical data

Open side panel	No
Insertion/withdrawal cycles	> 200
Fixing screws	4-40 UNC
Tightening torque	0.4 Nm

Protective circuit

Direction of action	Line-Line & Line-Earth Ground
Maximum continuous operating voltage U_C	5.2 V DC
Rated current	250 mA (25 °C)
Operating effective current I_C at U_C	≤ 100 µA
Protective conductor current I_{PE}	≤ 100 µA
Nominal discharge current I_n (8/20) µs (line-line)	350 A
Nominal discharge current I_n (8/20) µs (line-ground)	350 A
Total discharge current I_{Total} (8/20) µs	350 A
Max. discharge current I_{max} (8/20) µs maximum (line-line)	350 A
Max. discharge current I_{max} (8/20) µs maximum (line-earth)	350 A
Output voltage limitation at 1 kV/µs (line-line) spike	≤ 20 V
Output voltage limitation at 1 kV/µs (line-earth) spike	≤ 20 V
Output voltage limitation at 1 kV/µs (line-line) static	≤ 14 V
Output voltage limitation at 1 kV/µs (line-earth) static	≤ 14 V
Output voltage limitation (10/700) µs (line-line)	≤ 15 V (Uo=4 kV)
Output voltage limitation (10/700) µs (line-earth)	≤ 15 V (Uo=4 kV)
Residual voltage at I_n (conductor-conductor)	≤ 25 V

Residual voltage at I_n (conductor-ground)	≤ 25 V
Voltage protection level U_p (line-line)	≤ 25 V (C1 - 500 V / 250 A)
	≤ 15 V (C3 - 25 A)
	≤ 15 V (B2 - 4 kV / 100 A)
Voltage protection level U_p (line-earth)	≤ 25 V (C1 - 500 V / 250 A)
	≤ 15 V (C3 - 25 A)
	≤ 15 V (B2 - 4 kV / 100 A)
Response time t_A (line-line)	≤ 500 ns
Response time t_A (line-earth)	≤ 500 ns
Cut-off frequency fg (3 dB), sym. in 100 Ω system	typ. 70 MHz
Inductivity in series	0.11 µH
Surge protection fault message	none
Impulse durability (line-line)	C1 - 500 V / 250 A
	C3 - 2 kV / 25 A
Impulse durability (line-earth)	C1 - 500 V / 250 A
	C3 - 2 kV/25 A

Environmental and real-life conditions

Ambient conditions

Degree of protection	IP40
Ambient temperature (operation)	-20 °C ... 75 °C
Ambient temperature (storage/transport)	-20 °C ... 75 °C

Standards and regulations

VDE requirement class	C1
	C3
	B2

Standards Information technology specification

Standards/regulations	IEC 61643-21
	DIN EN 61643-21
	IEC 61643-21
	DIN EN 61643-21

Air clearances and creepage distances

Standards/regulations	IEC 60664-1 / DIN VDE 0110-1
Standards/specifications	IEC 61643-21

Mounting

Mounting type	Direct assembly on the device interface

Drawings

Dimensional drawing

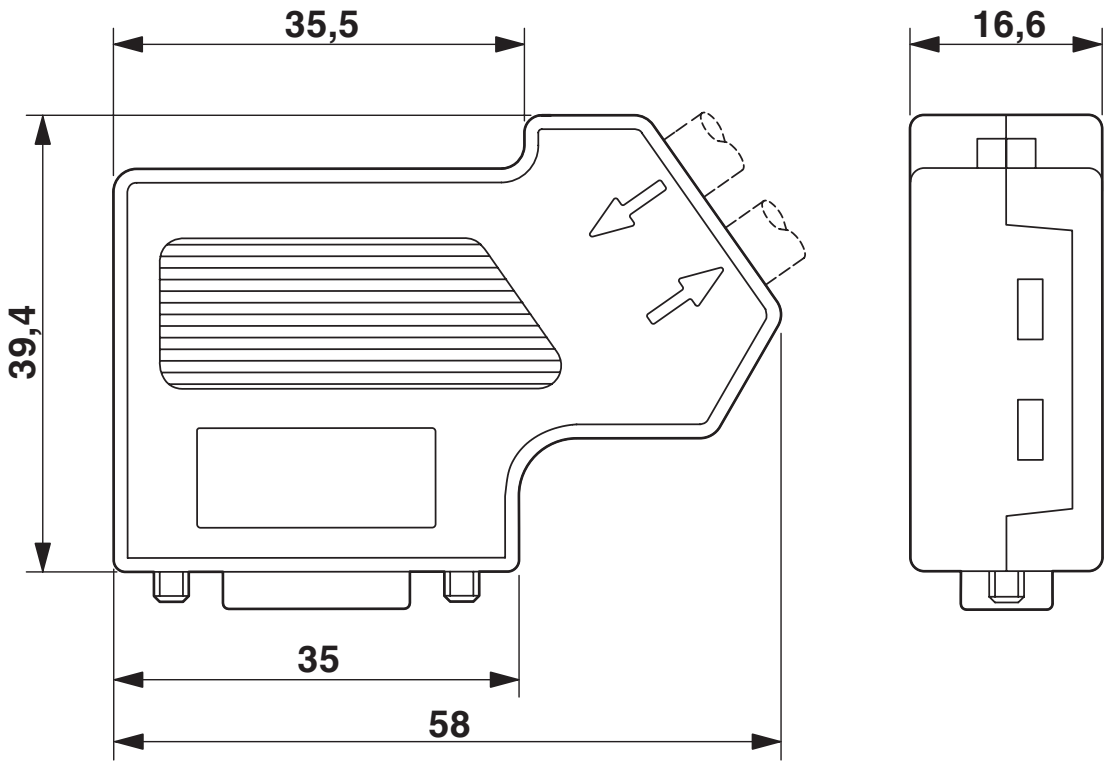

Dimensional drawing: D-UFB-PB

Product drawing

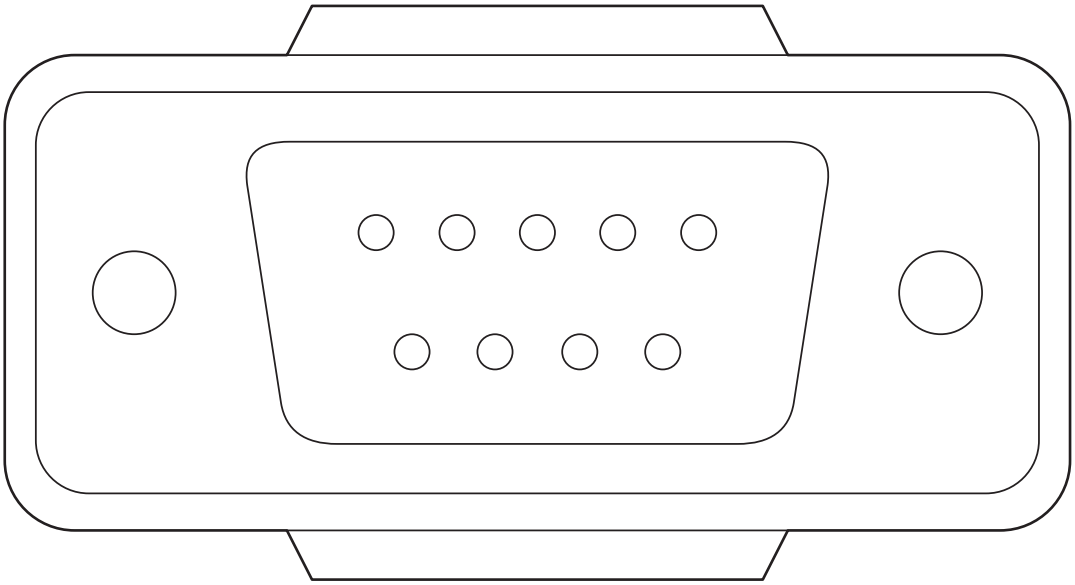

Circuit diagram

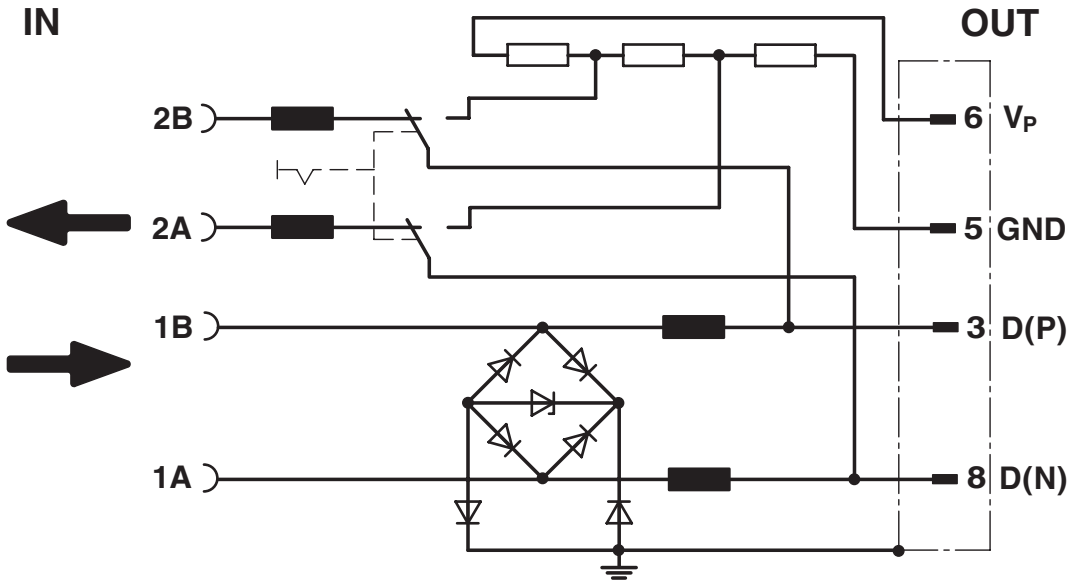

Classifications

ECLASS

ECLASS-13.0	27171503
ECLASS-15.0	27171503

ETIM

ETIM 10.0	EC001466

UNSPSC

UNSPSC 21.0	39121600

Environmental product compliance

EU RoHS

Fulfills EU RoHS substance requirements	Yes
Exemption	7(a), 7(c)-I

China RoHS

Environment friendly use period (EFUP)	EFUP-50
	An article-related China RoHS declaration table can be found in the download area for the respective article under "Manufacturer declaration". For all articles with EFUP-E, no China RoHS declaration table issued and required.

EU REACH SVHC

REACH candidate substance (CAS No.)	Lead(CAS: 7439-92-1)
SCIP	9bc3aadc-885e-4321-8a11-8cd8837f9d1d

Phoenix Contact 2026 © - all rights reserved
https://www.phoenixcontact.com

PHOENIX CONTACT Ltd
Halesfield 13, Telford
Shropshire, TF7 4PG
01952 681700
info@phoenixcontact.co.uk