STEP-UPS/12DC/12DC/4 - Uninterruptible power supply

2868693

https://www.phoenixcontact.com/gb/products/2868693

Please be informed that the data shown in this PDF document is generated from our online catalog. Please find the complete data in the user documentation. Our general terms of use for downloads are valid.



Uninterruptible power supply with integrated battery module. The STEP-BAT/LIPO/18.5 DC/1.4 AH battery module can be re-ordered separately.

Product description

UPS modules with integrated battery are particularly space-saving: the UPS module and battery are combined in one housing. It’s just a case of connecting a power supply upstream.

Your advantages

- UPS with integrated lithium-polymer battery

Commercial data

Item number	2868693
Packing unit	1 pc
Minimum order quantity	1 pc
Sales key	CMUS42
Product key	CMUS42
GTIN	4046356519922
Weight per piece (including packing)	595.4 g
Weight per piece (excluding packing)	595.4 g
Customs tariff number	85371091
Country of origin	DE

Technical data

Input data

DC operation

Input voltage	12 V DC
Nominal input voltage range	12 V DC
Input voltage range	10 V DC ... 16.5 V DC
Voltage type of supply voltage	DC
Buffer period	100 min (1 A)
	50 min (2 A)
	30 min (3 A)
	23 min (4 A)
Rotary selector switch	Service
	∞
	5 min.
	10 min.
	20 min.
Current consumption	6 A
	< 30 mA
	< 0.8 A (Charging (ICharge = max, IOut = 0))
Fixed backup threshold	< 10 V
Variable connect threshold	1 V / 1 s
Typical response time	< 0.5 s
Input fuse	7 A (slow-blow, internal)
Maximum current I_{max}	6 A

Output data

Efficiency	> 97.4 % (Mains operation, with charged energy storage)
	> 92 % (Battery operation)
Nominal output voltage	12 V DC
Nominal output current (I_N)	4 A (0 °C ... 40 °C)
Output current limit	In mains mode according to connected upstream current limiting device
	> 5 A (Battery operation)
POWER BOOST (I_{Boost})	5 A (0 °C ... 35 °C)
Bridging time	1200 s
Derating	35 °C ... 40 °C (5 %/K)
Output power	48 W
Power dissipation	0.4 W (Mains operation)
	1.2 W (Mains operation)
	5.5 W (Mains operation)
	1 W (Battery operation)
	4.4 W (Battery operation)

	5.4 W (Battery operation)
Connection in series	no

Mains operation

Nominal output voltage	12 V DC
Output voltage range	10 V DC ... 16.5 V DC (U_{Out} = U_{In} - 0.3 V DC)
Output current I_{max}	5 A (0 °C ... 35 °C)
Nominal output current (I_N)	4 A (0 °C ... 40 °C)

Battery operation

Nominal output voltage	12 V DC
Output voltage range	10 V DC ... 15 V DC (U_{Out} = $U_{In\ (t-1)}$)
Output current I_{max}	5 A (0 °C ... 35 °C)
Nominal output current (I_N)	4 A (0 °C ... 40 °C)

Signal: Alarm

Output description	Transistor

Signal: Battery charge

Output description	Transistor

Signal: Battery mode

Output description	Transistor

Energy storage

Nominal voltage U_N	18.5 V DC
End-of-charge voltage	18.5 V DC ... 21 V DC
Charging current	0.4 A
Nominal capacity	1.4 Ah
Nominal capacity range	1.4 Ah
Deep discharge protection	< 15 V DC
Latest startup date (battery only)	9 Months (20 °C ... 30 °C)
Battery technology	LIPO
Memory medium	Lithium polymer
Battery presence check (cyclic)	60 s
Quality check of battery	yes, with each charge and cyclically once per month
IQ technology	no
Network management	No

Connection data

Input

Connection method	Screw connection
Conductor cross-section, rigid min.	0.2 mm²
Conductor cross-section, rigid max.	2.5 mm²
Conductor cross-section flexible min.	0.2 mm²
Conductor cross-section flexible max.	2.5 mm²

Conductor cross-section AWG min.	24
Conductor cross-section AWG max.	12
Stripping length	6.5 mm
Screw thread	M3
Tightening torque, min	0.6 Nm
Tightening torque max	0.8 Nm

Output

Connection method	Screw connection
Conductor cross-section, rigid min.	0.2 mm²
Conductor cross-section, rigid max.	2.5 mm²
Conductor cross-section flexible min.	0.2 mm²
Conductor cross-section flexible max.	2.5 mm²
Conductor cross-section AWG min.	24
Conductor cross-section AWG max.	12
Stripping length	6.5 mm
Screw thread	M3
Tightening torque, min	0.6 Nm
Tightening torque max	0.8 Nm

Signal

Conductor cross-section, rigid min.	0.2 mm²
Conductor cross-section, rigid max.	2.5 mm²
Conductor cross-section flexible min.	0.2 mm²
Conductor cross-section flexible max.	2.5 mm²
Conductor cross-section AWG min.	24
Conductor cross-section AWG max.	12
Stripping length	6.5 mm
Screw thread	M3
Tightening torque, min	0.5 Nm
Tightening torque max	0.6 Nm

Signaling

Types of signaling	LED

Signal output

Signalization designation	Power In OK
Status display	LED
Note on status display	static on

Signal output: Switching output

Signalization designation	Alarm
Status display	LED
Note on status display	static on

Signal output: Switching output

Signalization designation	Battery charge
Status display	LED
Note on status display	flashing

Signal output: Switching output

Signalization designation	Battery mode
Status display	LED
Note on status display	static on

Signal output

Signalization designation	Overload
Status display	LED
Note on status display	flashing

Signal output

Signalization designation	Service/Battery Error
Status display	LED
Note on status display	flashing

Product properties

Product type	DC UPS
Product family	STEP DC UPS
IQ technology	no
MTBF (IEC 61709, SN 29500)	> 1997000 h (40 °C)

Insulation characteristics

Protection class	III
Degree of pollution	2

Dimensions

Width	108 mm
Height	90 mm
Depth	61 mm

Installation dimensions

Installation distance right/left	0 mm / 0 mm
Installation distance top/bottom	0 mm / 0 mm

Mounting

Mounting type	DIN rail mounting
Assembly note	alignable: horizontally 0 mm, vertically 50 mm
Mounting position	horizontal DIN rail NS 35, EN 60715

Material specifications

Housing material	PC
Type of housing	Plastic
Foot latch material	POM (Polyoxymethylene)

Environmental and real-life conditions

Ambient conditions

Degree of protection	IP20
Ambient temperature (operation)	0 °C ... 40 °C
Ambient temperature (storage/transport)	-20 °C ... 45 °C
Climatic class	3K3 (in acc. with EN 60721)
Max. permissible relative humidity (operation)	≤ 95 % (at 25 °C, non-condensing)
Shock	18 ms, 30g, in each space direction (according to IEC 60068-2-27)
Vibration (operation)	< 15 Hz, amplitude ±2.5 mm (according to IEC 60068-2-6)
	15 Hz ... 150 Hz, 2.3g, 90 min.

Standards and regulations

Standard – Electronic equipment for use in electrical power installations and their assembly into electrical power installations	EN 50178/VDE 0160 (PELV)
Standard - Electrical safety	EN 60950-1/VDE 0805 (SELV)

Approvals

UL approvals	UL Listed UL 508
	UL/C-UL Recognized UL 60950-1

EMC data

Electromagnetic compatibility	Conformance with EMC Directive 2014/30/EU
EMC requirements for noise emission	EN 61000-6-3
	EN 61000-6-4
EMC requirements for noise immunity	EN 61000-6-1
	EN 61000-6-2

Electrostatic discharge

Standards/regulations	EN 61000-4-2

Electrostatic discharge

Contact discharge	6 kV (Test Level 3)
Discharge in air	8 kV (Test Level 3)
Comments	Criterion A

Electromagnetic HF field

Standards/regulations	EN 61000-4-3

Electromagnetic HF field

Frequency range	80 MHz ... 1 GHz
Test field strength	10 V/m (Test Level 3)
Frequency range	1 GHz ... 2 GHz
Test field strength	10 V/m (Test Level 3)
Frequency range	2 GHz ... 3 GHz

Test field strength	10 V/m (Test Level 3)
Comments	Criterion A

Fast transients (burst)

Standards/regulations	EN 61000-4-4

Fast transients (burst)

Input	2 kV (Test Level 3 - asymmetrical)
Output	2 kV (Test Level 3 - asymmetrical)
Signal	2 kV (Test Level 4 - asymmetrical)
Comments	Criterion A

Surge voltage load (surge)

Standards/regulations	EN 61000-4-5

Surge voltage load (surge)

Input	1 kV (Test Level 2 - symmetrical)
	2 kV (Test Level 3 - asymmetrical)
Output	1 kV (Test Level 2 - symmetrical)
	2 kV (Test Level 3 - asymmetrical)
Signal	1 kV (Test Level 2 - asymmetrical)
Comments	Criterion A

Conducted interference

Standards/regulations	EN 61000-4-6

Conducted interference

Input/output/signal	asymmetrical
Frequency range	0.15 MHz ... 80 MHz
Comments	Criterion A
Voltage	10 V (Test Level 3)

Emitted interference

Standards/regulations	EN 61000-6-3
Radio interference voltage in acc. with EN 55011	EN 55011 (EN 55022) Class B, area of application: Industry and residential
Emitted radio interference in acc. with EN 55011	EN 55011 (EN 55022) Class B, area of application: Industry and residential

Criteria

Criterion A	Normal operating behavior within the specified limits.
Criterion B	Temporary impairment to operational behavior that is corrected by the device itself.

Drawings

Block diagram

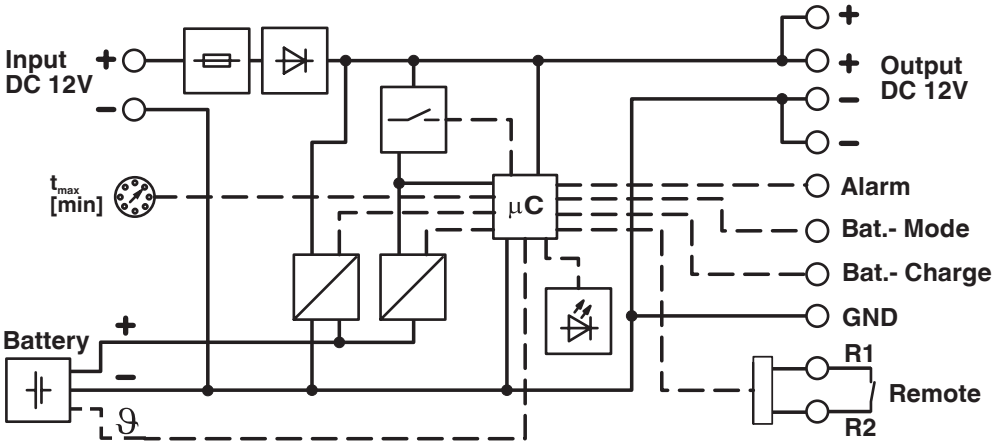

Classifications

UNSPSC

UNSPSC 21.0	39121011

Environmental product compliance

EU RoHS

Fulfills EU RoHS substance requirements	Yes, No exemptions

China RoHS

Environment friendly use period (EFUP)	EFUP-25
	An article-related China RoHS declaration table can be found in the download area for the respective article under "Manufacturer declaration". For all articles with EFUP-E, no China RoHS declaration table issued and required.

EU REACH SVHC

REACH candidate substance (CAS No.)	No substance above 0.1 wt%

Phoenix Contact 2026 © - all rights reserved
https://www.phoenixcontact.com

PHOENIX CONTACT Ltd
Halesfield 13, Telford
Shropshire, TF7 4PG
01952 681700
info@phoenixcontact.co.uk