STEP-PS/ 1AC/24DC/4.2 - Power supply

2868664

https://www.phoenixcontact.com/gb/products/2868664

Please be informed that the data shown in this PDF document is generated from our online catalog. Please find the complete data in the user documentation. Our general terms of use for downloads are valid.



Primary-switched STEP POWER power supply for DIN rail mounting, input: 1-phase, output: 24 V DC/4.2 A

Product description

STEP POWER power supplies for distribution boards
The STEP POWER power supply range was developed especially for building automation. The low idling losses and high degree of efficiency ensure maximum energy efficiency. They allow flexible use and can be snapped onto the DIN rail or screwed onto an even surface.

Your advantages

- Flexible mounting by simply snapping onto the DIN rail or screwing onto a level surface
- Reliable power supply thanks to high MTBF (mean time between failures) of more than 500,000 hours and U/I characteristic curve
- Energy savings thanks to maximum energy efficiency and incredibly low idling losses

ELEKTROGERÄTE RÜCKNAHME

Commercial data

Item number	2868664
Packing unit	1 pc
Minimum order quantity	1 pc
Sales key	CMPS13
Product key	CMPS13
GTIN	4046356287975
Weight per piece (including packing)	380 g
Weight per piece (excluding packing)	330 g
Customs tariff number	85044095

Country of origin	VN

Technical data

Input data

AC operation

Nominal input voltage range	100 V AC ... 240 V AC
Input voltage range	85 V AC ... 264 V AC
Voltage type of supply voltage	AC
Inrush current	< 15 A (typical)
Inrush current integral (I^2t)	< 1 A^2s
AC frequency range	45 Hz ... 65 Hz
Frequency range DC	0 Hz
Mains buffering time	typ. 20 ms (120 V AC)
	typ. 100 ms (230 V AC)
Current consumption	1.3 A (120 V AC)
	0.8 A (230 V AC)
Nominal power consumption	196.7 VA
Protective circuit	Transient surge protection; Varistor
Power factor	0.58
Typical response time	< 0.5 s
Input fuse	4 A (slow-blow, internal)
Recommended breaker for input protection	6 A ... 16 A (Characteristics B, C, D, K)

DC operation

Input voltage range	95 V DC ... 250 V DC
Voltage type of supply voltage	DC

Output data

Efficiency	> 88 % (for 230 V AC and nominal values)
Output characteristic	U/I
Nominal output voltage	24 V DC
Setting range of the output voltage (U_{Set})	22.5 V DC ... 29.5 V DC (> 24 V DC, constant capacity restricted)
Output current I_{max}	6.5 A
Nominal output current (I_N)	4.2 A (-25 °C ... 55 °C)
	4.4 A (-25 °C ... 40 °C permanent)
Derating	55 °C ... 70 °C (2.5 %/K)
Feedback voltage resistance	≤ 35 V DC
Protection against overvoltage at the output (OVP)	< 35 V DC
Control deviation	< 1 % (change in load, static 10 % ... 90 %)
	< 2 % (change in load, dynamic 10 % ... 90 %)
	< 0.1 % (change in input voltage ±10 %)
Residual ripple	< 40 mV_{PP} (20 MHz)
Output power	100.8 W
Peak switching voltages nominal load	< 30 mV_{PP} (20 MHz)

Maximum no-load power dissipation	< 0.7 W
Power loss nominal load max.	13.2 W
Rise time	< 0.5 s (U_{OUT} (10 % ... 90 %))
Connection in parallel	yes, for redundancy and increased capacity
Connection in series	yes
Fuse protection (secondary side)	electronic

Connection data

Input

Connection method	Screw connection
Conductor cross-section, rigid min.	0.2 mm²
Conductor cross-section, rigid max.	2.5 mm²
Conductor cross-section flexible min.	0.2 mm²
Conductor cross-section flexible max.	2.5 mm²
Conductor cross-section AWG min.	24
Conductor cross-section AWG max.	12
Stripping length	6.5 mm
Screw thread	M3
Tightening torque, min	0.5 Nm
Tightening torque max	0.6 Nm

Output

Connection method	Screw connection
Conductor cross-section, rigid min.	0.2 mm²
Conductor cross-section, rigid max.	2.5 mm²
Conductor cross-section flexible min.	0.2 mm²
Conductor cross-section flexible max.	2.5 mm²
Conductor cross-section AWG min.	24
Conductor cross-section AWG max.	12
Stripping length	6.5 mm
Screw thread	M3
Tightening torque, min	0.5 Nm
Tightening torque max	0.6 Nm

Signaling

Types of signaling	LED
Operating voltage display	Green LED

Signal output: LED status indicator

Status display	"DC OK" LED green
Note on status display	U_{OUT} > 21.5 V: LED lights up

Electrical properties

Number of phases	1
	4 kV AC (type test)

Insulation voltage input/output	3.75 kV AC (routine test)
	3.75 kV AC (routine test)
	4 kV AC (type test)

Product properties

Product type	Power supply
Product family	STEP POWER
MTBF (IEC 61709, SN 29500)	> 897000 h (40 °C)

Insulation characteristics

Protection class	II (in closed control cabinet)
Overvoltage category	III
Degree of pollution	2

Dimensions

Dimensional drawing	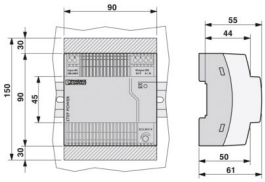
Width	90 mm
Height	90 mm
Depth Device depth (DIN rail mounting)	55 mm (Device depth (DIN rail mounting))
Horizontal pitch	5 HP

Installation dimensions

Installation distance right/left	0 mm / 0 mm
Installation distance top/bottom	30 mm / 30 mm

Mounting

Mounting type	DIN rail mounting
Assembly note	alignable: 0 mm horizontally, 30 mm vertically
Mounting position	horizontal DIN rail NS 35, EN 60715
With protective coating	no

Material specifications

Housing material	Plastic
Housing material	PC
Type of housing	Polycarbonate
Foot latch material	POM (Polyoxymethylene)

Environmental and real-life conditions

Ambient conditions

Degree of protection	IP20
Ambient temperature (operation)	-25 °C ... 70 °C (> 55° C derating : 2.5%/K)
Ambient temperature (storage/transport)	-40 °C ... 85 °C
Ambient temperature (start-up type tested)	-40 °C
Climatic class	3K3 (in acc. with EN 60721)
Max. permissible relative humidity (operation)	≤ 95 % (at 25 °C, non-condensing)
Shock	18 ms, 30g, in each space direction (according to IEC 60068-2-27)
Vibration (operation)	< 15 Hz, amplitude ±2.5 mm (according to IEC 60068-2-6)
	15 Hz ... 150 Hz, 2.3g, 90 min.
Temp code	T4A (60 °C)

Standards and regulations

Rail applications	EN 50121-4
Standard – Electronic equipment for use in electrical power installations and their assembly into electrical power installations	EN 50178/VDE 0160 (PELV)
Standard – Limitation of mains harmonic currents	EN 61000-3-2
Standard - Electrical safety	IEC 62368-1 (SELV)
Standard – Protection against shock currents, basic requirements for protective separation in electrical equipment	EN 50178
Standard – Safety extra-low voltage	IEC 62368-1 (SELV) und EN 60204-1 (PELV)
Standard - Safe isolation	DIN VDE 0100-410
Standard - Safety of transformers	EN 61558-2-16

Approvals

CSA	CSA-C22.2 No. 107.1-01
Shipbuilding approval	DNV GL (EMC B) ABS, NK
UL approvals	UL/C-UL listed UL 508
	UL/C-UL Recognized UL 60950-1
	UL ANSI/ISA-12.12.01 Class I, Division 2, Groups A, B, C, D T4A (Hazardous Location)

Conformity/Approvals

SIL in accordance with IEC 61508	0

EMC data

Electromagnetic compatibility	Conformance with EMC Directive 2014/30/EU
Low Voltage Directive	Conformance with Low Voltage Directive 2014/35/EC
EMC requirements for noise emission	EN 61000-6-3
	EN 61000-6-4
EMC requirements for noise immunity	EN 61000-6-1
	EN 61000-6-2

Electrostatic discharge

Standards/regulations	EN 61000-4-2

Electrostatic discharge

Contact discharge	± 6 kV (Contact discharge)
Discharge in air	± 8 kV (Air discharge)
Comments	Criterion B

Electromagnetic HF field

Standards/regulations	EN 61000-4-3

Electromagnetic HF field

Frequency range	80 MHz ... 1 GHz
Test field strength	10 V/m
Frequency range	1.4 GHz ... 2 GHz
Test field strength	3 V/m
Frequency range	2 GHz ... 2.7 GHz
Test field strength	1 V/m
Comments	Criterion A

Fast transients (burst)

Standards/regulations	EN 61000-4-4

Fast transients (burst)

Input	2 kV (Test Level 3 - asymmetrical)
Output	2 kV (Test Level 3 - asymmetrical)
Comments	Criterion B

Surge voltage load (surge)

Standards/regulations	EN 61000-4-5

Surge voltage load (surge)

Input	2 kV (Test Level 3 - symmetrical)
	4 kV (Test Level 4 - asymmetrical)
Output	1 kV (Test Level 2 - symmetrical)
	1 kV (Test Level 2 - asymmetrical)
Comments	Criterion A

Conducted interference

Standards/regulations	EN 61000-4-6

Conducted interference

Frequency range	10 kHz ... 80 MHz
Comments	Criterion A
Voltage	10 V (Test Level 3)

Voltage dips

Standards/regulations	EN 61000-4-11

Emitted interference

Standards/regulations	EN 61000-6-3
Radio interference voltage in acc. with EN 55011	EN 55011 (EN 55022) class B used in industry and residential area / EMC 1

Emitted radio interference in acc. with EN 55011	EN 55011 (EN 55022) class B used in industry and residential area / EMC 1

Drawings

Dimensional drawing

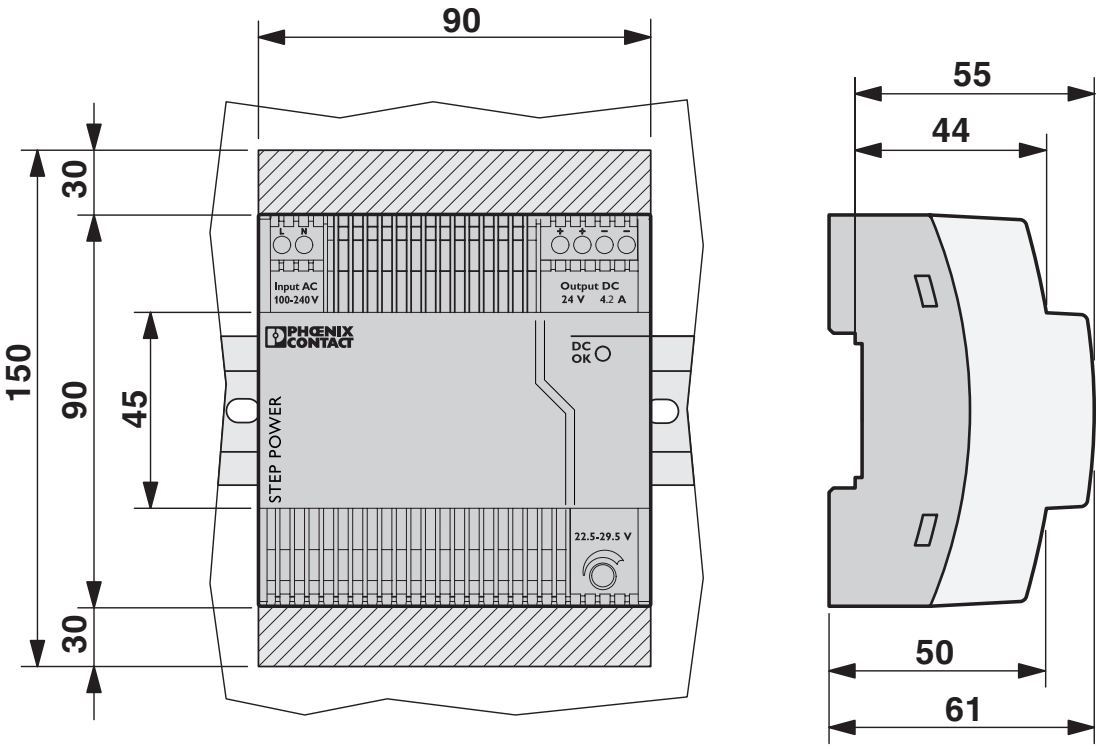

Schematic diagram

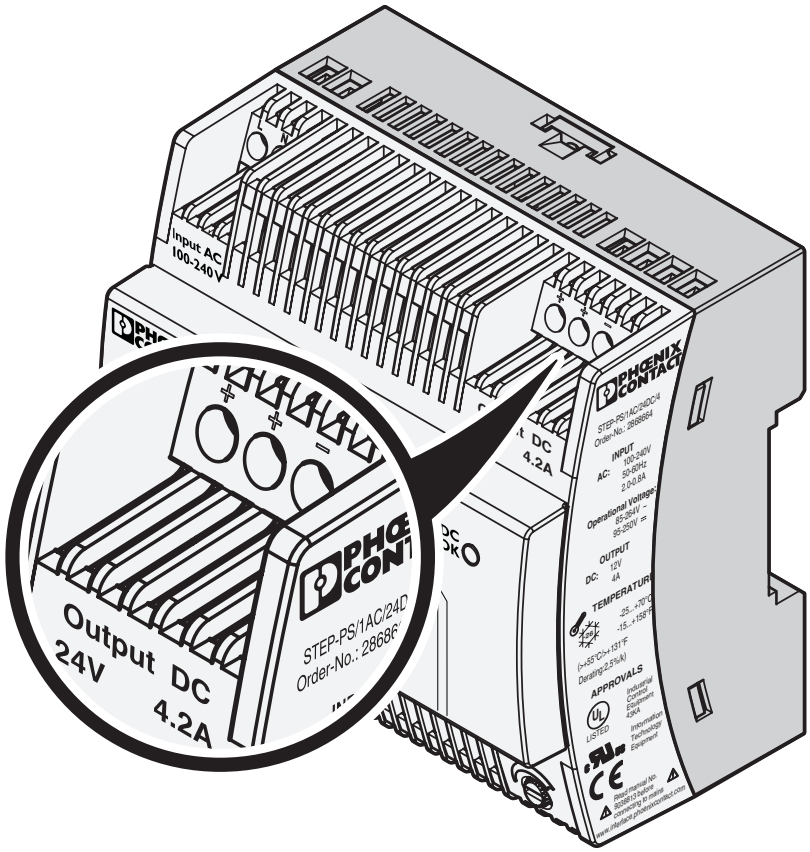

Schematic diagram

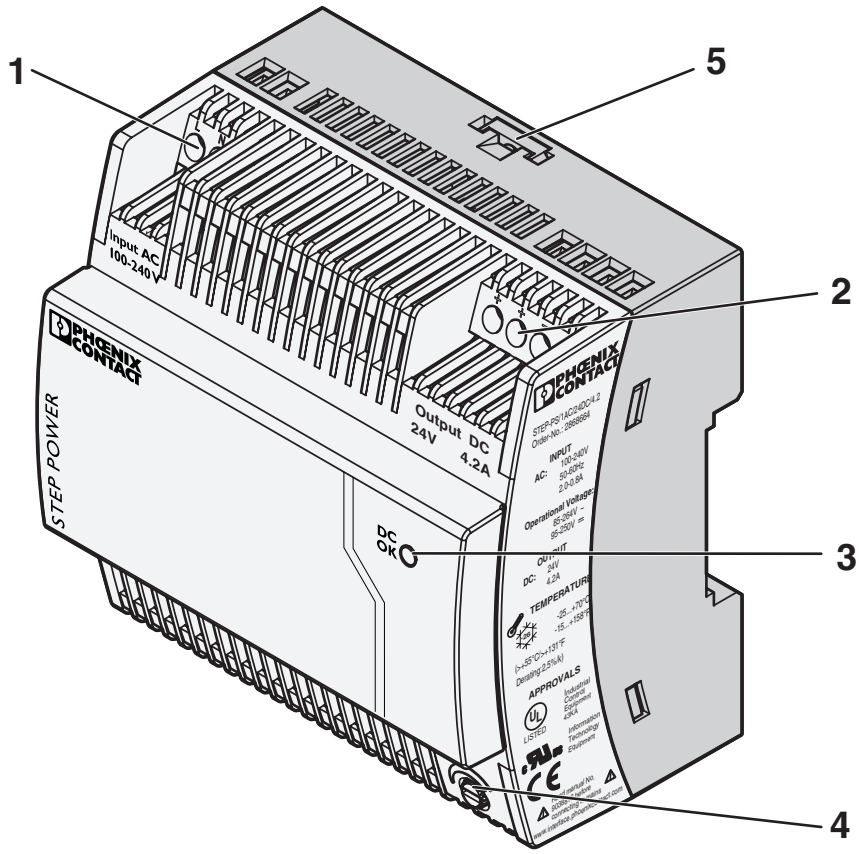

Schematic diagram

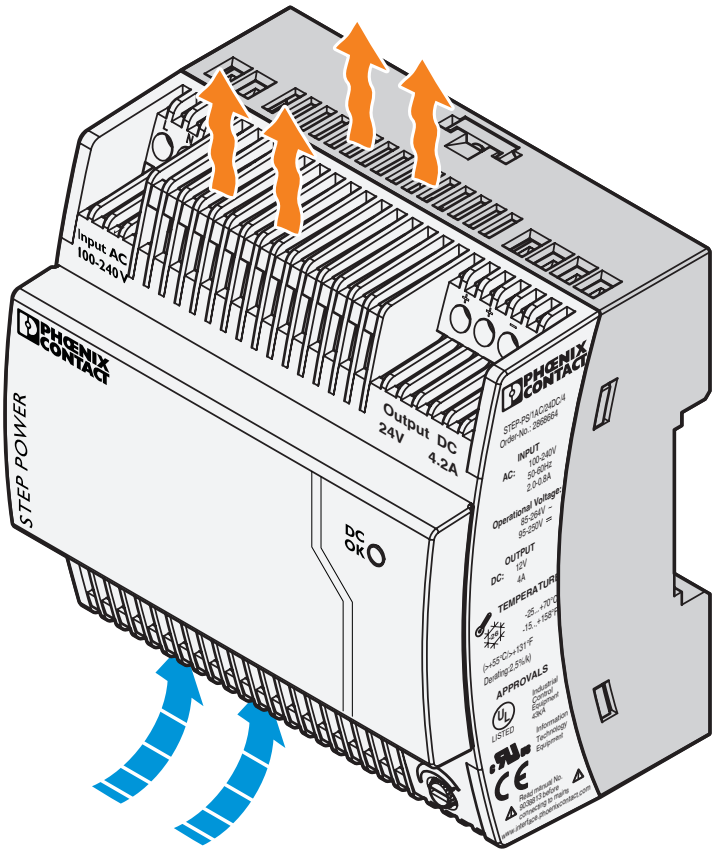

Schematic diagram

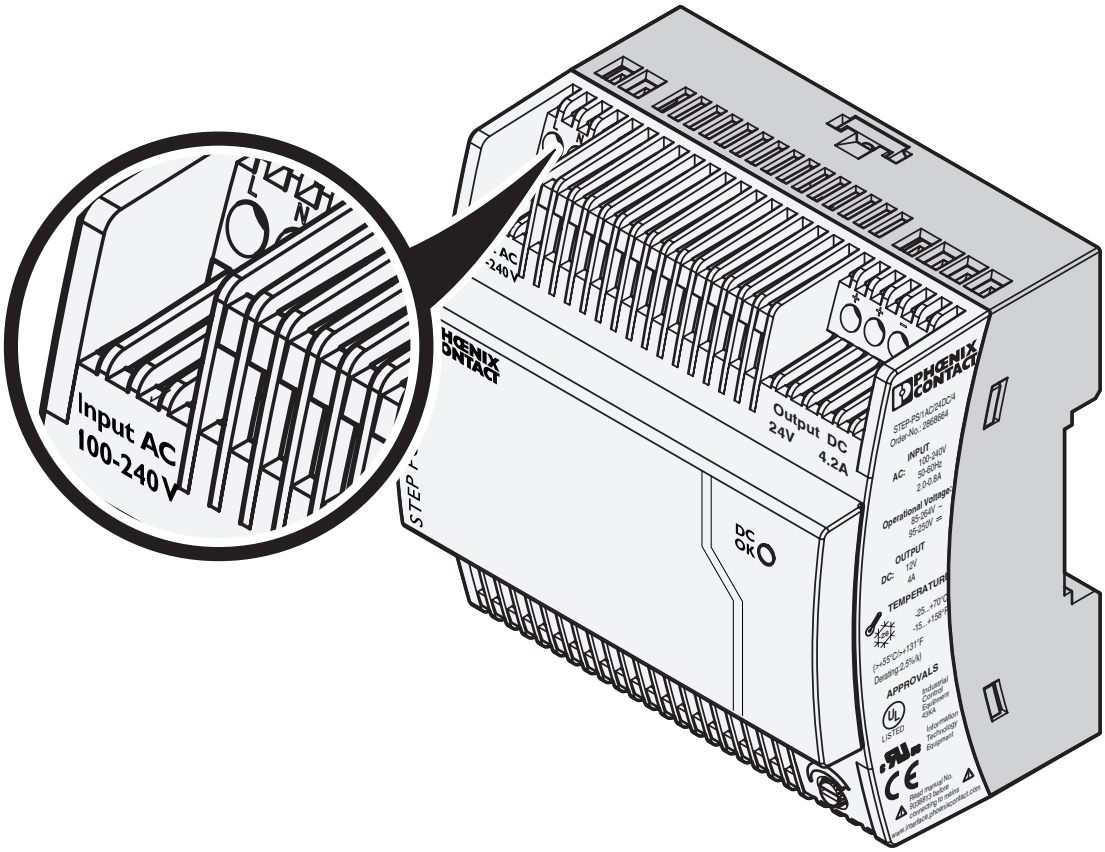

Block diagram

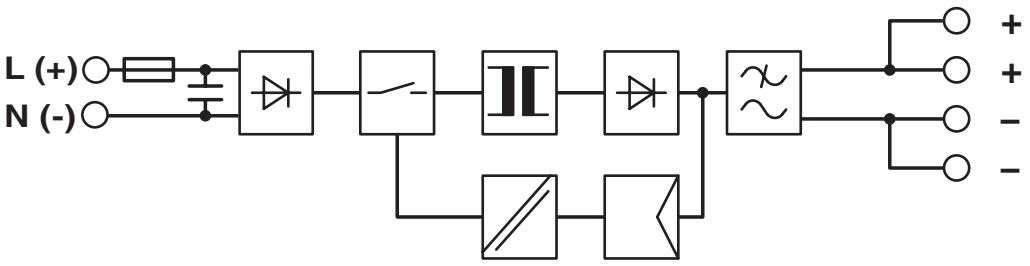

Approvals

To download certificates, visit the product detail page: https://www.phoenixcontact.com/gb/products/2868664

cUL Recognized
Approval ID: FILE E 214596

UL Recognized
Approval ID: FILE E 214596

IECEE CB Scheme
Approval ID: DK-3955

EAC
Approval ID: RU S-DE.BL08.W.00764

NK
Approval ID: TA24454M

UL Listed
Approval ID: E123528

cUL Listed
Approval ID: FILE E 123528

BSH
Approval ID: 581

ABS
Approval ID: 23-2446587-PDA

DNV
Approval ID: TAA00001YD

IECEE CB Scheme
Approval ID: NL2-021193

cUL Listed
Approval ID: E199827

UL Listed
Approval ID: E199827

Classifications

ECLASS

ECLASS-13.0	27040701
ECLASS-15.0	27040701

ETIM

ETIM 10.0	EC002540

UNSPSC

UNSPSC 21.0	39121000

Environmental product compliance

EU RoHS

Fulfills EU RoHS substance requirements	Yes
Exemption	6(c), 7(c)-I

China RoHS

Environment friendly use period (EFUP)	EFUP-25
	An article-related China RoHS declaration table can be found in the download area for the respective article under "Manufacturer declaration". For all articles with EFUP-E, no China RoHS declaration table issued and required.

EU REACH SVHC

REACH candidate substance (CAS No.)	Lead(CAS: 7439-92-1)
SCIP	413aacb0-a491-44a9-b92e-ed2ed50d27b3

EF3.1 Climate Change

CO2e kg	7.388 kg CO2e

Phoenix Contact 2026 © - all rights reserved
https://www.phoenixcontact.com

PHOENIX CONTACT Ltd
Halesfield 13, Telford
Shropshire, TF7 4PG
01952 681700
info@phoenixcontact.co.uk