QUINT-PS/3AC/24DC/20 - Power supply

2866792

https://www.phoenixcontact.com/gb/products/2866792

Please be informed that the data shown in this PDF document is generated from our online catalog. Please find the complete data in the user documentation. Our general terms of use for downloads are valid.



Please use the following item for new projects: 2904622 QUINT4-PS/3AC/24DC/20. Primary-switched power supply unit QUINT POWER, Screw connection, SFB Technology (Selective Fuse Breaking), input: 3-phase, output: 24 V DC / 20 A, adjustable from 18 V DC ... 29.5 V DC, 450 V DC ... 800 V DC

Product description

QUINT POWER power supplies with maximum functionality
QUINT POWER miniature circuit breakers magnetically and therefore quickly trip at six times the nominal current, for selective and therefore cost-effective system protection. The high level of system availability is additionally ensured, thanks to preventive function monitoring, as it reports critical operating states before errors occur.
Reliable starting of heavy loads takes place via the static power reserve POWER BOOST. Thanks to the adjustable voltage, all ranges between 5 V DC ... 56 V DC are covered.

Your advantages

- Reliable starting of difficult loads
- High level of system availability even in the event of permanent phase failure
- Preventive function monitoring

ELEKTROGERÄTE RÜCKNAHME

Commercial data

Item number	2866792
Packing unit	1 pc
Minimum order quantity	1 pc
Sales key	CMPQ33
Product key	CMPQ33
GTIN	4046356152907
Weight per piece (including packing)	1,838 g

Weight per piece (excluding packing)	1,504 g
Customs tariff number	85044095
Country of origin	TH

Technical data

Input data

AC operation

Nominal input voltage range	3x 400 V AC ... 500 V AC
Input voltage range	3x 320 V AC ... 575 V AC
	2x 360 V AC ... 575 V AC
	450 V DC ... 800 V DC
Input voltage range DC	450 V DC ... 800 V DC
Voltage type of supply voltage	AC
Inrush current	< 20 A (typical)
Inrush current integral (I^2t)	< 3.2 A^2s
AC frequency range	45 Hz ... 65 Hz
Frequency range DC	0 Hz
Mains buffering time	> 20 ms (400 V AC)
	> 30 ms (500 V AC)
Current consumption	3x 1.6 A (400 V AC)
	3x 1.3 A (500 V AC)
	0.9 A (600 V DC)
Nominal power consumption	783 VA
Protective circuit	Transient surge protection; Varistor, gas-filled surge arrester
Power factor	0.66
Typical response time	< 0.16 s
Permissible backup fuse	B6 B10 B16 AC:
Permissible DC backup fuse	DC: Connect a suitable fuse upstream
Recommended breaker for input protection	6 A ... 16 A (AC: Characteristics B, C, D, K)
Discharge current to PE	< 3.5 mA

DC operation

Voltage type of supply voltage	DC

Output data

Efficiency	> 93 % (at 400 V AC and nominal values)
Output characteristic	U/I
Nominal output voltage	24 V DC ±1 %
Setting range of the output voltage (U_{Set})	18 V DC ... 29.5 V DC (> 24 V DC, constant capacity restricted)
Nominal output current (I_N)	20 A (-25 °C ... 60 °C, U_{OUT} = 24 V DC)
POWER BOOST (I_{Boost})	26 A (-25 °C ... 40 °C permanent, U_{OUT} = 24 V DC)
Selective Fuse Breaking (I_{SFB})	120 A (12 ms)
Magnetic circuit breaker tripping	B2 / B4 / B6 / B10 / B16 / C2 / C4 / C6
Derating	60 °C ... 70 °C (2.5 %/K)
Feedback voltage resistance	max. 35 V DC
Protection against overvoltage at the output (OVP)	< 35 V DC

Control deviation	< 1 % (change in load, static 10 % ... 90 %)
	< 3 % (change in load, dynamic 10 % ... 90 %)
	< 0.1 % (change in input voltage ±10 %)
Residual ripple	< 40 mV_{PP} (with nominal values)
Output power	480 W
Peak switching voltages nominal load	< 40 mV_{PP} (at nominal values, 20 MHz)
Maximum no-load power dissipation	11 W
Power loss nominal load max.	40 W
Rise time	< 0.05 s (U_{OUT} (10 % ... 90 %))
Connection in parallel	yes, for redundancy and increased capacity
Connection in series	yes

Signal: DC OK active

Output description	U_{OUT} > 0.9 x U_N: High signal
Switching voltage range	18 V ... 24 V
Output voltage	+ 24 V DC
Maximum inrush current	≤ 20 mA (short-circuit-proof)
Continuous load current	≤ 20 mA

Signal: DC OK floating

Output description	Relay contact, U_{OUT} > 0.9 x U_N: Contact closed
Maximum switching voltage	30 V AC/DC
	24 V DC
Maximum inrush current	0.5 A
	1 A
Continuous load current	≤ 1 A

Signal: POWER BOOST, active

Output description	I_{OUT} < I_N: High signal
Switching voltage range	18 V ... 24 V
Output voltage	+ 24 V DC
Maximum inrush current	≤ 20 mA (short-circuit-proof)
Continuous load current	≤ 20 mA

Connection data

Input

Connection method	Screw connection
Conductor cross-section, rigid min.	0.2 mm²
Conductor cross-section, rigid max.	6 mm²
Conductor cross-section flexible min.	0.2 mm²
Conductor cross-section flexible max.	4 mm²
Conductor cross-section AWG min.	18
Conductor cross-section AWG max.	10
Stripping length	7 mm
Screw thread	M4

Tightening torque, min	0.5 Nm
Tightening torque max	0.6 Nm

Output

Connection method	Screw connection
Conductor cross-section, rigid min.	0.2 mm²
Conductor cross-section, rigid max.	6 mm²
Conductor cross-section flexible min.	0.2 mm²
Conductor cross-section flexible max.	4 mm²
Conductor cross-section AWG min.	12
Conductor cross-section AWG max.	10
Stripping length	7 mm
Screw thread	M4
Tightening torque, min	0.5 Nm
Tightening torque max	0.6 Nm

Signal

Connection method	Screw connection
Conductor cross-section, rigid min.	0.2 mm²
Conductor cross-section, rigid max.	6 mm²
Conductor cross-section flexible min.	0.2 mm²
Conductor cross-section flexible max.	4 mm²
Conductor cross-section AWG min.	18
Conductor cross-section AWG max.	10
Screw thread	M4
Tightening torque, min	0.5 Nm
Tightening torque max	0.6 Nm

Signaling

Types of signaling	LED
	Active switching output
	Relay contact
Operating voltage display	Green LED

Signal output: DC OK active

Status display	U_{OUT} > 0.9 x U_N: "DC OK" LED green
Note on status display	U_{OUT} < 0.9 x U_N: Flashing "DC OK" LED

Signal output: DC OK floating

Status display	U_{OUT} > 0.9 x U_N: "DC OK" LED green
Note on status display	U_{OUT} < 0.9 x U_N: Flashing "DC OK" LED

Signal output: POWER BOOST, active

Status display	I_{OUT} > I_N: LED "BOOST" yellow

Electrical properties

Number of phases	3
Insulation voltage input/output	4 kV AC (type test)
	2 kV AC (routine test)
Insulation voltage output / PE	500 V DC (routine test)
Insulation voltage input / PE	3.5 kV AC (type test)
	2 kV AC (routine test)

Product properties

Product type	Power supply
Product family	QUINT POWER
MTBF (IEC 61709, SN 29500)	> 900000 h (25 °C)
	> 534000 h (40 °C)
	> 250000 h (60 °C)

Insulation characteristics

Protection class	I
Overvoltage category (EN 62477-1)	III
Degree of pollution	2

Dimensions

Width	69 mm
Height	130 mm
Depth	122 mm

Alternative assembly

Width	122 mm
Height	130 mm
Depth	72 mm

Mounting

Assembly note	alignable: P_N ≥50%, 5 mm horizontally, 15 mm next to active components, 50 mm vertically alignable: P_N <50%, 0 mm horizontally, 40 mm vertically top, 20 mm vertically bottom
Mounting position	horizontal DIN rail NS 35, EN 60715
With protective coating	no

Material specifications

Housing material	Metal
Hood version	Galvanized sheet steel, free from chrome (VI)
Side element version	Aluminum

Environmental and real-life conditions

Ambient conditions

Degree of protection	IP20
Ambient temperature (operation)	-25 °C ... 70 °C (> 60 °C Derating: 2,5 %/K)

Ambient temperature (storage/transport)	-40 °C ... 85 °C
Ambient temperature (start-up type tested)	-40 °C
Maximum altitude	5000 m
Climatic class	3K3 (in acc. with EN 60721)
Max. permissible relative humidity (operation)	95 % (at 25 °C, non-condensing)
Shock	18 ms, 30g, in each space direction (according to IEC 60068-2-27)
Vibration (operation)	< 15 Hz, amplitude ±2.5 mm (according to IEC 60068-2-6)
	15 Hz ... 150 Hz, 2.3g, 90 min.
Temp code	T4 (-25 ... +60 °C)

Standards and regulations

Rail applications	EN 50121-4
	EN 50121-3-2
Standard – Limitation of mains harmonic currents	EN 61000-3-2
Standard - Electrical safety	IEC 61010-2-201 (SELV)
Standard - Equipment safety	GS (tested safety)
Standard - Approval for medical use	IEC 60601-1, 2 x MOOP
Standard – Protection against shock currents, basic requirements for protective separation in electrical equipment	EN 50178
Standard – Safety extra-low voltage	IEC 61010-1 (SELV)
	IEC 61010-2-201 (PELV)
Standard - Safe isolation	IEC 61010-2-201
Standard - safety for equipment for measurement, control, and laboratory use	IEC 61010-1
Standard - surge resistance	VDE 0160 (curve W2)
Approval - requirement of the semiconductor industry with regard to mains voltage dips	SEMI F47-0706 Compliance Certificate

Approvals

CSA	CAN/CSA-C22.2 No. 60950-1-07
	CSA-C22.2 No. 107.1-01
Shipbuilding approval	DNV GL (EMC B), ABS, LR, RINA, NK, BV
UL approvals	UL Listed UL 508
	UL/C-UL Recognized UL 60950-1 (3-wire + PE, star net)
	UL ANSI/ISA-12.12.01 Class I, Division 2, Groups A, B, C, D T4 (Hazardous Location)

EMC data

Electromagnetic compatibility	Conformance with EMC Directive 2014/30/EU
Low Voltage Directive	Conformance with Low Voltage Directive 2014/35/EC
EMC requirements for noise emission	EN 61000-6-3
	EN 61000-6-4
EMC requirements for noise immunity	EN 61000-6-1
	EN 61000-6-2

Electrostatic discharge

Standards/regulations	EN 61000-4-2

Electrostatic discharge

Contact discharge	8 kV (Test Level 4)
Discharge in air	15 kV (Test Level 4)
Comments	Criterion A

Electromagnetic HF field

Standards/regulations	EN 61000-4-3

Electromagnetic HF field

Frequency range	80 MHz ... 1 GHz
Test field strength	20 V/m (Test Level 3)
Frequency range	1 GHz ... 2 GHz
Test field strength	10 V/m (Test Level 3)
Frequency range	2 GHz ... 3 GHz
Test field strength	10 V/m (Test Level 3)
Comments	Criterion A

Fast transients (burst)

Standards/regulations	EN 61000-4-4

Fast transients (burst)

Input	4 kV (Test Level 4 - asymmetrical)
Output	2 kV (Test Level 3 - asymmetrical)
Signal	2 kV (Test Level 4 - asymmetrical)
Comments	Criterion B

Surge voltage load (surge)

Standards/regulations	EN 61000-4-5

Surge voltage load (surge)

Input	3 kV (Test Level 3 - symmetrical)
	6 kV (Test Level 4 - asymmetrical)
Output	1 kV (Test Level 2 - symmetrical)
	2 kV (Test Level 3 - asymmetrical)
Signal	1 kV (Test Level 2 - asymmetrical)
Comments	Criterion A

Conducted interference

Standards/regulations	EN 61000-4-6

Conducted interference

Input/output/signal	asymmetrical
Frequency range	0.15 MHz ... 80 MHz
Comments	Criterion A

Voltage	10 V (Test Level 3)

Emitted interference

Standards/regulations	EN 61000-6-3
Radio interference voltage in acc. with EN 55011	EN 55011 (EN 55022) Class B, area of application: Industry and residential
Emitted radio interference in acc. with EN 55011	EN 55011 (EN 55022) Class B, area of application: Industry and residential

Criteria

Criterion A	Normal operating behavior within the specified limits.
Criterion B	Temporary impairment to operational behavior that is corrected by the device itself.

Drawings

Block diagram

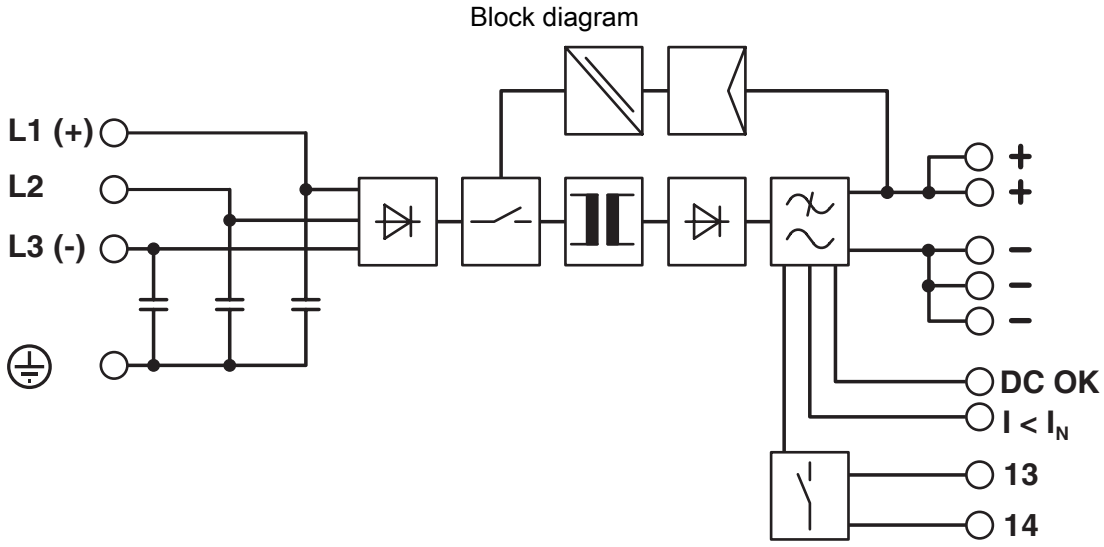

Approvals

To download certificates, visit the product detail page: https://www.phoenixcontact.com/gb/products/2866792

cUL Recognized
Approval ID: E211944

UL Recognized
Approval ID: E211944

IECEE CB Scheme
Approval ID: SI-2794

EAC
Approval ID: RU S-DE.BL08.W.00764

LR
Approval ID: LR22301698TA-02

NK
Approval ID: TA24091M

BV
Approval ID: 21004/D0 BV

EAC
Approval ID: RU S-DE.BL08.W.00764

UL Listed
Approval ID: E123528

BSH
Approval ID: 581

RINA
Approval ID: ELE333522XG

ABS
Approval ID: 23-2355407-PDA

Type approved
Approval ID: SI-SIQ BG 005/002

SEMI F47
Approval ID: SEMI F47

DNV
Approval ID: TAA000030X

cCSAus
Approval ID: 1925529

EAC
Approval ID: KZ7500651 0101 12535

UL Listed
Approval ID: E199827

Classifications

ECLASS

ECLASS-13.0	27040701
ECLASS-15.0	27040701

ETIM

ETIM 10.0	EC002540

UNSPSC

UNSPSC 21.0	39121000

Environmental product compliance

EU RoHS

Fulfills EU RoHS substance requirements	Yes
Exemption	7(a), 7(c)-I

China RoHS

Environment friendly use period (EFUP)	EFUP-25
	An article-related China RoHS declaration table can be found in the download area for the respective article under "Manufacturer declaration". For all articles with EFUP-E, no China RoHS declaration table issued and required.

EU REACH SVHC

REACH candidate substance (CAS No.)	Lead(CAS: 7439-92-1)
SCIP	3c5729f1-3b1b-48d2-a3cd-bf324d61eff3

EF3.1 Climate Change

CO2e kg	56.744 kg CO2e

Phoenix Contact 2026 © - all rights reserved
https://www.phoenixcontact.com

PHOENIX CONTACT Ltd
Halesfield 13, Telford
Shropshire, TF7 4PG
01952 681700
info@phoenixcontact.co.uk