MINI-DC-UPS/24DC/2 - Uninterruptible power supply

2866640

https://www.phoenixcontact.com/gb/products/2866640

Please be informed that the data shown in this PDF document is generated from our online catalog. Please find the complete data in the user documentation. Our general terms of use for downloads are valid.



Uninterruptible power supply with integrated power supply unit, 2 A, in combination with MINI-BAT/24/DC 0.8 AH or 1.3 AH

Product description

The MINI UPS modules with integrated power supply are particularly space-saving: UPS module and power supply in one housing. Only one battery module is required to complete the UPS system.
Battery modules with lead AGM technology enable buffer times of up to 2 hours under nominal load for output voltages of 24 V DC or 12 V DC.

Your advantages

- High operational safety - comprehensive signaling and temperature-dependent battery charging
- Fast installation – minimal wiring effort with COMBICON connectors for easy connection

ELEKTROGERÄTE RÜCKNAHME

Commercial data

Item number	2866640
Packing unit	1 pc
Minimum order quantity	1 pc
Sales key	CMUM13
Product key	CMUM13
GTIN	4046356113533
Weight per piece (including packing)	486 g
Weight per piece (excluding packing)	447 g
Customs tariff number	85371091
Country of origin	CN

Technical data

Input data

DC operation

Input voltage range	100 V DC ... 350 V DC
Voltage type of supply voltage	DC
Inrush current	< 34 A (< 1.1 A^2s)
Inrush current integral (I^2t)	< 1.1 A^2s
Mains buffering time	see diagram
Buffer period	20 min (2 A)
Rotary selector switch	Can be set to: 0.5 min; 1 min; 2 min; 3 min; 5 min; 10 min; 15 min; 20 min; 30 min; permanent
Current consumption	0.6 A
	0.85 A (230 V AC)
	1.1 A
	1.5 A (120 V AC)
Protective circuit	Varistor
Power factor	approx. 0.5
Typical response time	100 ms
Input fuse	3.15 A (slow-blow, internal)
Permissible backup fuse	B6 B10 B16
Recommended breaker for input protection	6 A ... 16 A (Characteristics B, C, D, K)

AC operation

Nominal input voltage range	100 V AC ... 240 V AC
Input voltage range	85 V AC ... 264 V AC
Voltage type of supply voltage	AC

Output data

Efficiency	> 83 %
Nominal output voltage	24 V DC (AC input voltage available: 22.5 to 29.5 V DC, AC input voltage not available: 27.9 to 19.2 V DC)
Setting range of the output voltage (U_{Set})	22.5 V DC ... 29.5 V DC (normal mode; in the buffer mode, dependent on a battery voltage of 27.9 V DC ... 19.2 V DC)
Nominal output current (I_N)	2 A
Output current limit	max. 3 A
Bridging time	1200 s
Derating	60 °C ... 70 °C (2.5 %/K)
Feedback voltage resistance	35 V DC
Protection against overvoltage at the output (OVP)	< 35 V DC
Max. capacitive load	unlimited
Control deviation	< 1 % (change in load, static 10 % ... 90 %)
Residual ripple	< 50 mV_{PP}
Output power	48 W

Peak switching voltages nominal load	< 100 mV_{PP}
Maximum no-load power dissipation	3.8 W
Power loss nominal load max.	15 W
Power dissipation battery operation	2.1 W
Rise time	< 100 ms
Connection in parallel	yes
Connection in series	no

Mains operation

Nominal output voltage	24 V DC
Output voltage range	22.5 V DC ... 29.5 V DC
Nominal output current (I_N)	2 A

Battery operation

Nominal output voltage	24 V DC
Output voltage range	19.2 V DC ... 27.6 V DC (U_{OUT} = U_{BAT} - 0,5 V DC)
Nominal output current (I_N)	2 A

Signal: Active (high = buffer module is loaded)

Output description	Power Good
Maximum switching voltage	≤ 24 V
Output voltage	+ 24 V
Continuous load current	≤ 20 mA

Signal: Alarm

Output description	Relay output
Maximum switching voltage	≤ 24 V
Output voltage	24 V
Continuous load current	≤ 200 mA

Signal: Battery charge

Output description	Relay output
Maximum switching voltage	≤ 24 V
Output voltage	24 V
Continuous load current	≤ 200 mA

Signal: Battery mode

Output description	Relay output
Maximum switching voltage	≤ 24 V
Output voltage	24 V
Continuous load current	≤ 200 mA

Energy storage

Charging current	1 A
Nominal capacity range	0.8 Ah ... 1.3 Ah
Memory medium	external, battery 0.8 Ah / 1.3 Ah
IQ technology	no

Network management	No

Connection data

Input

Connection method	Pluggable COMBICON screw connections
Conductor cross-section, rigid min.	0.2 mm²
Conductor cross-section, rigid max.	2.5 mm²
Conductor cross-section flexible min.	0.2 mm²
Conductor cross-section flexible max.	2.5 mm²
Conductor cross-section AWG min.	24
Conductor cross-section AWG max.	12
Stripping length	8 mm
Screw thread	M3
Tightening torque, min	0.5 Nm
Tightening torque max	0.6 Nm

Output

Connection method	Pluggable COMBICON screw connections
Conductor cross-section, rigid min.	0.2 mm²
Conductor cross-section, rigid max.	2.5 mm²
Conductor cross-section flexible min.	0.2 mm²
Conductor cross-section flexible max.	2.5 mm²
Conductor cross-section AWG min.	24
Conductor cross-section AWG max.	12
Stripping length	8 mm
Screw thread	M3
Tightening torque, min	0.5 Nm
Tightening torque max	0.6 Nm

Signal

Conductor cross-section, rigid min.	0.2 mm²
Conductor cross-section, rigid max.	2.5 mm²
Conductor cross-section flexible min.	0.2 mm²
Conductor cross-section flexible max.	2.5 mm²
Conductor cross-section AWG min.	24
Conductor cross-section AWG max.	12
Screw thread	M3
Tightening torque, min	0.5 Nm
Tightening torque max	0.6 Nm

Signaling

Types of signaling	LED

Signal output: Active (high = buffer module is loaded)

Status display	LED "Power Good", green

Note on status display	Buffer module is loaded: LED ON

Signal output: Alarm

Status display	LED (red)
Note on status display	Malfunction/alarm: LED permanently lit

Signal output: Battery charge

Status display	LED flashing yellow
Note on status display	Battery charge/battery is being charged: LED flashing

Signal output: Battery mode

Status display	LED (yellow)
Note on status display	Battery mode/buffer mode: LED permanently lit

Electrical properties

Insulation voltage input/output	4 kV (type test)
	2 kV (routine test)

Product properties

Product type	DC UPS with integrated power supply
Product family	MINI DC UPS with integrated power supply
IQ technology	no
MTBF (IEC 61709, SN 29500)	> 753000 h (40 °C)

Insulation characteristics

Protection class	II (in closed control cabinet)
Degree of pollution	2

Dimensions

Width	67.5 mm
Height	99 mm
Depth	107 mm

Installation dimensions

Installation distance right/left	0 mm / 0 mm
Installation distance top/bottom	30 mm / 30 mm

Mounting

Mounting type	DIN rail mounting
Assembly note	alignable: horizontally 0 mm, vertically 50 mm
Mounting position	horizontal DIN rail NS 35, EN 60715

Material specifications

Housing material	Plastic
Type of housing	Polyamide PA, color: green

Environmental and real-life conditions

Ambient conditions

Degree of protection	IP20
Ambient temperature (operation)	-25 °C ... 70 °C (> 60 °C Derating: 2,5 %/K)
Ambient temperature (storage/transport)	-40 °C ... 85 °C
Climatic class	3K3 (in acc. with EN 60721)
Max. permissible relative humidity (operation)	95 % (at 25 °C, non-condensing)
Shock	18 ms, 30g, in each space direction (according to IEC 60068-2-27)
Vibration (operation)	< 15 Hz, amplitude ±2.5 mm (according to IEC 60068-2-6)
	15 Hz ... 150 Hz, 2.3g, 90 min.

Standards and regulations

Rail applications	EN 50121-4
Standard – Electronic equipment for use in electrical power installations and their assembly into electrical power installations	EN 50178/VDE 0160 (PELV)
Standard - Electrical safety	EN 60950-1/VDE 0805 (SELV)
	EN 61558-2-17
Standard – Protection against shock currents, basic requirements for protective separation in electrical equipment	EN 50178
Standard – Safety extra-low voltage	EN 60950-1 (SELV)
	EN 60204 (PELV)
Standard - Safe isolation	DIN VDE 0100-410

Approvals

UL approvals	UL Listed UL 508
	UL/C-UL Recognized UL 60950-1
	UL ANSI/ISA-12.12.01 Class I, Division 2, Groups A, B, C, D (Hazardous Location)

EMC data

Electromagnetic compatibility	Conformance with EMC Directive 2014/30/EU
Low Voltage Directive	Conformance with Low Voltage Directive 2014/35/EC
EMC requirements for noise emission	EN 61000-6-3
	EN 61000-6-4
EMC requirements for noise immunity	EN 61000-6-1
	EN 61000-6-2

Noise emission

Standards/regulations	EN 55011 (EN 55022)

Electrostatic discharge

Standards/regulations	EN 61000-4-2
Housing	Level 3

Electrostatic discharge

Contact discharge	6 kV

Discharge in air	8 kV
Comments	Criterion B

Electromagnetic HF field

Standards/regulations	EN 61000-4-3

Electromagnetic HF field

Frequency range	80 MHz ... 2 GHz
Test field strength	10 V/m
Comments	Criterion A

Fast transients (burst)

Standards/regulations	EN 61000-4-4

Fast transients (burst)

Input	4 kV (level 4 - asymmetrical: conductor to ground)
Output	2 kV (level 3 - asymmetrical: conductor to ground)
Signal	1 kV (level 2 - asymmetrical: conductor to ground)
Comments	Criterion B

Surge voltage load (surge)

Standards/regulations	EN 61000-4-5

Surge voltage load (surge)

Input	4 kV (level 4 - asymmetrical: conductor to ground)
	2 kV (level 4 - symmetrical: conductor to conductor)
Output	2 kV (Level 3 - asymmetrical)
	1 kV (Level 3 - symmetrical)
Signal	2 kV (Level 3 - asymmetrical)
	1 kV (Level 3 - symmetrical)
Comments	Criterion B

Conducted interference

Standards/regulations	EN 61000-4-6

Conducted interference

Input/output/signal	Level 3
Frequency range	10 kHz ... 80 MHz
Comments	Criterion A
Voltage	10 V

Voltage dips

Standards/regulations	EN 61000-4-11

Emitted interference

Standards/regulations	EN 61000-6-3
Radio interference voltage in acc. with EN 55011	EN 55011 (EN 55022) Class B, area of application: Industry and residential
Emitted radio interference in acc. with EN 55011	EN 55011 (EN 55022) Class B, area of application: Industry and

	residential

Drawings

Diagram

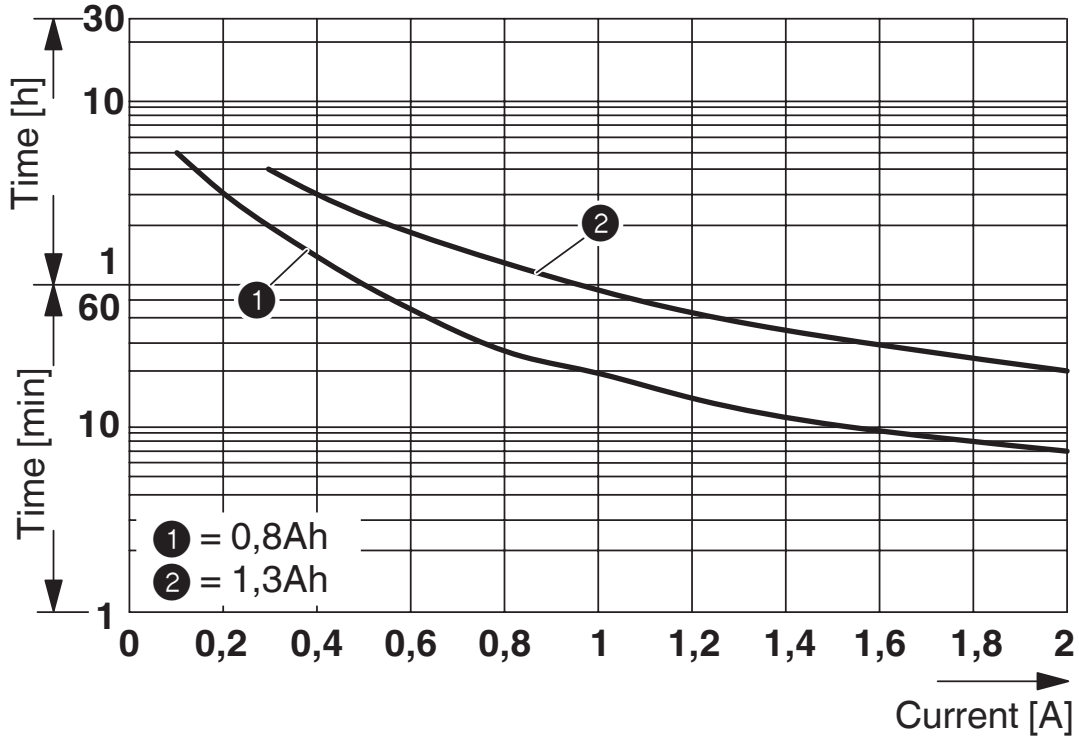

Block diagram

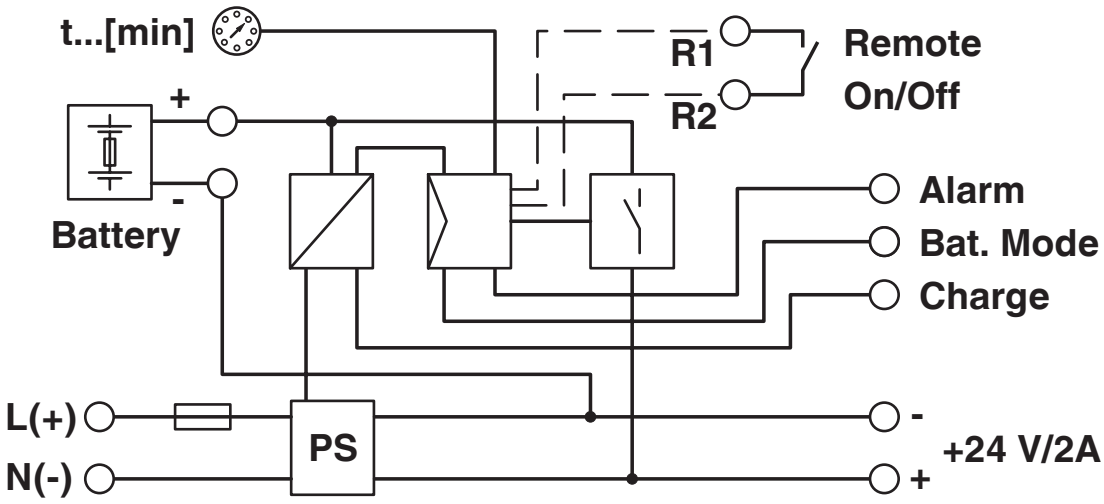

Graphic

Load Current	Buffertime for 24 V DC system										
	Minutes										Hour
	8	9	10	15	20	25	30	40	45	50	1
0.5 A											
1 A											
1.5 A											
2 A											

The data is based on an ambient temperature of +25 °C at the start of use.

2866666 MINI-BAT/24DC/0.8AH

1394729 TRIO-BAT/PB/24DC/1.2AH

Buffer times for MINI DC UPS for 24 V systems

Approvals

To download certificates, visit the product detail page: https://www.phoenixcontact.com/gb/products/2866640

cUL Recognized
Approval ID: FILE E 211944

UL Recognized
Approval ID: E211944

EAC
Approval ID: RU S-DE.BL08.W.00764

EAC
Approval ID: RU-DE.B.00184/20

UL Listed
Approval ID: E123528

KC
Approval ID: R-R-PCK-2866640

CoC / Compliance Statement
Approval ID: 17-235-00

cUL Listed
Approval ID: E199827

UL Listed
Approval ID: E199827

Classifications

ECLASS

ECLASS-13.0	27040705
ECLASS-15.0	27040705

ETIM

ETIM 10.0	EC000382

UNSPSC

UNSPSC 21.0	39121000

Environmental product compliance

EU RoHS

Fulfills EU RoHS substance requirements	Yes
Exemption	7(a), 7(c)-I

China RoHS

Environment friendly use period (EFUP)	EFUP-25
	An article-related China RoHS declaration table can be found in the download area for the respective article under "Manufacturer declaration". For all articles with EFUP-E, no China RoHS declaration table issued and required.

EU REACH SVHC

REACH candidate substance (CAS No.)	Lead(CAS: 7439-92-1)
SCIP	2b4b9094-1235-45d0-bf72-fefce9e27e6c

EF3.1 Climate Change

CO2e kg	9.642 kg CO2e

Phoenix Contact 2026 © - all rights reserved
https://www.phoenixcontact.com

PHOENIX CONTACT Ltd
Halesfield 13, Telford
Shropshire, TF7 4PG
01952 681700
info@phoenixcontact.co.uk