TRIO-DIODE/48DC/2X10/1X20 - Redundancy module

2866527

https://www.phoenixcontact.com/gb/products/2866527

Please be informed that the data shown in this PDF document is generated from our online catalog. Please find the complete data in the user documentation. Our general terms of use for downloads are valid.



Redundancy module with function monitoring, 48 V DC, 2x 10 A, 1x 20 A

Product description

TRIO DIODE is the DIN-rail mountable redundancy module from the TRIO POWER product range.
Using the redundancy module, it is possible for two power supply units of the same type connected in parallel on the output side to increase performance or for redundancy to be 100 % isolated from one another.
Redundant systems are used in systems that place particularly high demands on operational reliability. The connected power supply units must be large enough that the total current requirements of all loads can be met by one power supply unit. The redundant structure of the power supply therefore ensures long-term, permanent system availability.
In the event of an internal device fault or failure of the mains power supply on the primary side, the other device automatically takes over the entire power supply of the loads without interruption. The floating signal contact and LED immediately indicate the loss of redundancy.

Your advantages

- Save energy
- Permanent monitoring of redundancy
- Consistent redundancy up to the load

Commercial data

Item number	2866527
Packing unit	1 pc
Minimum order quantity	1 pc
Sales key	CMRT44
Product key	CMRT44
GTIN	4046356562973
Weight per piece (including packing)	516.4 g
Weight per piece (excluding packing)	370 g
Customs tariff number	85049090
Country of origin	CN

Technical data

Input data

DC operation

Nominal input voltage range	48 V DC
Input voltage range	30 V DC ... 56 V DC
Voltage type of supply voltage	DC
Reverse polarity protection	yes, < 60 V
Nominal input current (I_N)	2x 10 A (-25 °C ... 55 °C)
	1x 20 A (-25 °C ... 55 °C)
Maximum current I_{max}	2x 15 A (-25 °C ... 40 °C)
	1x 30 A (-25 °C ... 40 °C)
Transient surge protection	Varistor
Voltage drop, input/output	approx. 0.65 V

Output data

Efficiency	> 97 %
Nominal output voltage	U_{In} - 0,65 V
Nominal output current (I_N)	20 A (Increasing power)
	10 A (Redundancy)
Derating	55 °C ... 70 °C (2.5 %/K)
Maximum no-load power dissipation	7 W (I_{OUT} = 10 A)
Power loss nominal load max.	14 W (I_{OUT} = 20 A)
Connection in series	no

Signal: Floating redundancy OK

Output description	Contact closed when $U_{IN}1$ & $U_{IN}2$ > 28 V
Maximum switching voltage	30 V AC/DC
Maximum inrush current	≤ 100 mA (short-circuit-proof)

Connection data

Input

Connection method	Screw connection
Conductor cross-section, rigid min.	0.2 mm²
Conductor cross-section, rigid max.	2.5 mm²
Conductor cross-section flexible min.	0.2 mm²
Conductor cross-section flexible max.	2.5 mm²
Conductor cross-section AWG min.	24
Conductor cross-section AWG max.	14
Stripping length	9 mm
Screw thread	M2,5
Tightening torque, min	0.4 Nm
Tightening torque max	0.5 Nm

Output

Connection method	Screw connection
Conductor cross-section, rigid min.	0.5 mm²
Conductor cross-section, rigid max.	6 mm²
Conductor cross-section flexible min.	0.5 mm²
Conductor cross-section flexible max.	4 mm²
Conductor cross-section AWG min.	20
Conductor cross-section AWG max.	10
Stripping length	14 mm
Screw thread	M3
Tightening torque, min	0.5 Nm
Tightening torque max	0.6 Nm

Signal

Conductor cross-section, rigid min.	0.2 mm²
Conductor cross-section, rigid max.	2.5 mm²
Conductor cross-section flexible min.	0.2 mm²
Conductor cross-section flexible max.	2.5 mm²
Conductor cross-section AWG min.	24
Conductor cross-section AWG max.	14
Screw thread	M2,5
Tightening torque, min	0.4 Nm
Tightening torque max	0.5 Nm

Signaling

Types of signaling	LED
	Relay contact

Signal output: Floating redundancy OK

Status display	LED redundancy OK
Note on status display	U_{IN1}& U_{IN2} > 28 V: LED lights up green

Electrical properties

Insulation voltage input, output / housing	500 V

Product properties

Product type	Redundancy module
Product family	TRIO DIODE
MTBF (IEC 61709, SN 29500)	> 10000000 h (40 °C)
LED	yes

Insulation characteristics

Protection class	III
Degree of pollution	2

Dimensions

Width	32 mm
Height	130 mm
Depth	115 mm
Horizontal pitch	1.8 HP

Installation dimensions

Installation distance right/left	0 mm / 0 mm
Installation distance top/bottom	50 mm / 50 mm

Mounting

Mounting type	DIN rail mounting
Assembly note	alignable: horizontally 0 mm, vertically 50 mm
Mounting position	horizontal DIN rail NS 35, EN 60715

Material specifications

Housing material	Metal
Housing material	Steel sheet, zinc-plated
Type of housing	Steel sheet, zinc-plated
Side element version	Aluminum

Environmental and real-life conditions

Ambient conditions

Degree of protection	IP20
Ambient temperature (operation)	-25 °C ... 70 °C (> 55° C derating : 2.5%/K)
Ambient temperature (storage/transport)	-40 °C ... 85 °C
Climatic class	3K3 (in acc. with EN 60721)
Max. permissible relative humidity (operation)	≤ 95 % (at 25 °C, non-condensing)
Shock	15g in all directions in acc. with IEC 60068-2-27
Vibration (operation)	< 15 Hz, amplitude ±2.5 mm
	15 Hz ... 150 Hz, 2.3g t_v = 90 min.

Standards and regulations

Standard – Electronic equipment for use in electrical power installations and their assembly into electrical power installations	EN 50178/VDE 0160 (PELV)
Standard - Electrical safety	EN 60950-1/VDE 0805 (SELV)
Standard – Protection against shock currents, basic requirements for protective separation in electrical equipment	EN 50178
Standard – Safety extra-low voltage	IEC 60950-1 (SELV) and EN 60204-1 (PELV)
Standard - Safe isolation	DIN VDE 0100-410

Approvals

UL approvals	UL/C-UL listed UL 508
	UL/C-UL Recognized UL 60950-1

Conformity/Approvals

SIL in accordance with IEC 61508	0

EMC data

Electromagnetic compatibility	Conformance with EMC Directive 2014/30/EU
Low Voltage Directive	Conformance with Low Voltage Directive 2014/35/EC
EMC requirements for noise emission	EN 61000-6-3
	EN 61000-6-4
EMC requirements for noise immunity	EN 61000-6-1
	EN 61000-6-2

Electrostatic discharge

Standards/regulations	EN 61000-4-2

Electrostatic discharge

Contact discharge	6 kV (Test Level 3)
Discharge in air	8 kV (Test Level 3)
Comments	Criterion B

Electromagnetic HF field

Standards/regulations	EN 61000-4-3

Electromagnetic HF field

Frequency range	80 MHz ... 1 GHz
Test field strength	10 V/m (Test Level 3)
Frequency range	1 GHz ... 2 GHz
Test field strength	10 V/m (Test Level 3)
Frequency range	2 GHz ... 3 GHz
Test field strength	10 V/m (Test Level 3)
Comments	Criterion A

Fast transients (burst)

Standards/regulations	EN 61000-4-4

Fast transients (burst)

Input	2 kV (Test Level 3 - asymmetrical)
Output	2 kV (Test Level 3 - asymmetrical)
Comments	Criterion B

Surge voltage load (surge)

Standards/regulations	EN 61000-4-5

Surge voltage load (surge)

Input	2 kV (Test Level 3 - asymmetrical)
	1 kV (Test Level 2 - symmetrical)
Output	2 kV (Test Level 3 - asymmetrical)
	1 kV (Test Level 2 - symmetrical)

Comments	Criterion B

Conducted interference

Standards/regulations	EN 61000-4-6

Conducted interference

Input/output/signal	asymmetrical
Frequency range	0.15 MHz ... 80 MHz
Comments	Criterion A
Voltage	10 V (Test Level 3)

Emitted interference

Standards/regulations	EN 61000-6-3
Radio interference voltage in acc. with EN 55011	EN 55011 (EN 55022) Class B, area of application: Industry and residential
Emitted radio interference in acc. with EN 55011	EN 55011 (EN 55022) Class B, area of application: Industry and residential

Criteria

Criterion A	Normal operating behavior within the specified limits.
Criterion B	Temporary impairment to operational behavior that is corrected by the device itself.

Drawings

Block diagram

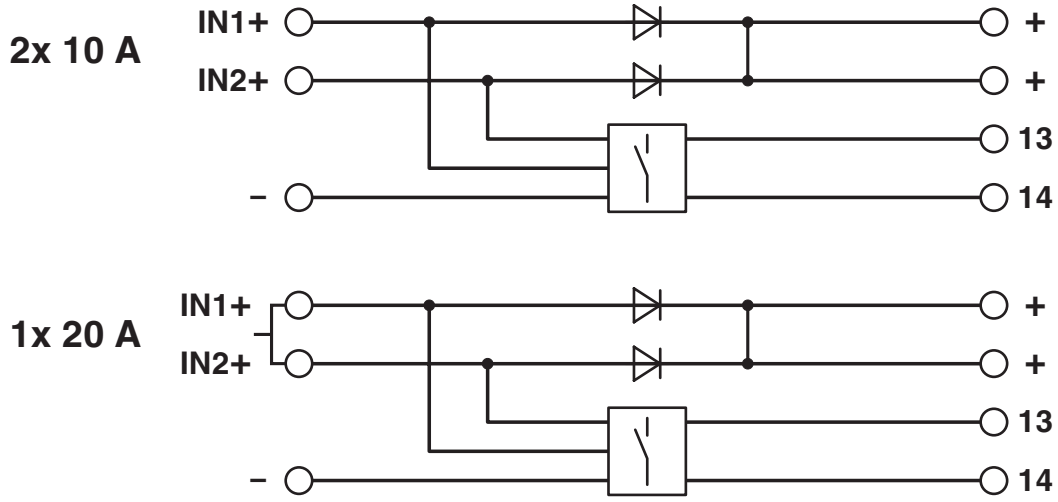

Classifications

ECLASS

ECLASS-13.0	27371010

ETIM

ETIM 9.0	EC000683

UNSPSC

UNSPSC 21.0	32151500

Environmental product compliance

EU RoHS

Fulfills EU RoHS substance requirements	Yes
Exemption	7(a), 7(c)-I

China RoHS

Environment friendly use period (EFUP)	EFUP-25
	An article-related China RoHS declaration table can be found in the download area for the respective article under "Manufacturer declaration". For all articles with EFUP-E, no China RoHS declaration table issued and required.

EU REACH SVHC

REACH candidate substance (CAS No.)	Lead(CAS: 7439-92-1)
SCIP	2b5e1fe4-dc0e-46f0-b276-074e8f45352c

Phoenix Contact 2026 © - all rights reserved
https://www.phoenixcontact.com

PHOENIX CONTACT Ltd
Halesfield 13, Telford
Shropshire, TF7 4PG
01952 681700
info@phoenixcontact.co.uk