TRIO-PS/1AC/12DC/10 - Power supply

2866488

https://www.phoenixcontact.com/gb/products/2866488

Please be informed that the data shown in this PDF document is generated from our online catalog. Please find the complete data in the user documentation. Our general terms of use for downloads are valid.



Primary-switched TRIO POWER power supply for DIN rail mounting, input: 1-phase, output: 12 V DC/10 A

Product description

TRIO POWER power supplies with standard functionality
TRIO POWER is particularly suited to standard machine production, thanks to 1- and 3-phase versions up to 960 W. The wide-range input and the international approval package enable worldwide use.
The robust metal housing, the high electric strength, and the wide temperature range ensure a high level of power supply reliability.

Your advantages

- Use the third negative terminal block as a grounding terminal block and minimize installation costs
- Rugged design with metal housing and wide temperature range from -25 to +70°C
- Maximum operational reliability thanks to high MTBF (mean time between failures) of more than 500,000 hours and high dielectric strength of up to 300 V AC
- Compensation of voltage drops by means of output voltage that can be adjusted on the front

ELEKTROGERÄTE RÜCKNAHME

Commercial data

Item number	2866488
Packing unit	1 pc
Minimum order quantity	1 pc
Sales key	CMPT12
Product key	CMPT12
GTIN	4046356287807
Weight per piece (including packing)	780.5 g

Weight per piece (excluding packing)	600 g
Customs tariff number	85044095
Country of origin	CN

Technical data

Input data

Nominal input voltage range	100 V AC ... 240 V AC
Input voltage range	85 V AC ... 264 V AC (derating < 90 V AC: 2.5 % per Kelvin)
Derating	< 90 V AC (2.5 %/V)
Input voltage range AC	85 V AC ... 264 V AC (derating < 90 V AC: 2.5 % per Kelvin)
Electric strength, max.	300 V AC
Voltage type of supply voltage	AC
Inrush current	< 15 A
Inrush current integral (I^2t)	< 1.1 A^2s
AC frequency range	45 Hz ... 65 Hz
Mains buffering time	> 20 ms (120 V AC)
	> 86 ms (230 V AC)
Current consumption	1.7 A (120 V AC)
	0.9 A (230 V AC)
Nominal power consumption	218.7 VA
Protective circuit	Transient surge protection; Varistor
Power factor	0.63
Typical response time	< 1 s
Permissible backup fuse	B6 B10 B16
Recommended breaker for input protection	6 A ... 16 A (Characteristics B, C, D, K)
Discharge current to PE	< 3.5 mA

Output data

Efficiency	> 86 % (for 230 V AC and nominal values)
Output characteristic	U/I
Nominal output voltage	12 V DC ±1 %
Setting range of the output voltage (U_{Set})	10 V DC ... 18 V DC (> 12 V DC, constant capacity restricted)
Nominal output current (I_N)	10 A (-25 °C ... 55 °C)
Derating	55 °C ... 70 °C (2.5 %/K)
Feedback voltage resistance	25 V DC
Protection against overvoltage at the output (OVP)	< 25 V DC
Max. capacitive load	unlimited
Active current limitation	Approx. 12 A (in the event of a short-circuit)
Control deviation	< 1 % (change in load, static 10 % ... 90 %)
	< 2 % (change in load, dynamic 10 % ... 90 %)
	< 0.1 % (change in input voltage ±10 %)
Residual ripple	< 20 mV_{PP}
Output power	120 W
Peak switching voltages nominal load	< 70 mV_{PP}
Maximum no-load power dissipation	1.1 W
Power loss nominal load max.	18 W

Rise time	< 2 ms (U_{OUT} (10 % ... 90 %))
Connection in parallel	yes, for redundancy and increased capacity
Connection in series	yes

Connection data

Input

Connection method	Screw connection
Conductor cross-section, rigid min.	0.2 mm²
Conductor cross-section, rigid max.	2.5 mm²
Conductor cross-section flexible min.	0.2 mm²
Conductor cross-section flexible max.	2.5 mm²
Conductor cross-section AWG min.	24
Conductor cross-section AWG max.	14
Stripping length	9 mm
Screw thread	M2,5
Tightening torque, min	0.4 Nm
Tightening torque max	0.5 Nm

Output

Connection method	Screw connection
Conductor cross-section, rigid min.	0.2 mm²
Conductor cross-section, rigid max.	2.5 mm²
Conductor cross-section flexible min.	0.2 mm²
Conductor cross-section flexible max.	2.5 mm²
Conductor cross-section AWG min.	24
Conductor cross-section AWG max.	14
Stripping length	9 mm
Screw thread	M2,5
Tightening torque, min	0.4 Nm
Tightening torque max	0.5 Nm

Signaling

Types of signaling	LED
Operating voltage display	Green LED

Signal output

Status display	"DC OK" LED green
Note on status display	U_{OUT} < 0.9 x U_N: LED flashing

Electrical properties

Insulation voltage input/output	4 kV AC (type test)
	2 kV AC (routine test)
Insulation voltage output / PE	500 V DC (type test)
Insulation voltage input / PE	2 kV AC (type test)
	2 kV AC (routine test)

Product properties

Product type	Power supply
Product family	TRIO POWER
MTBF (IEC 61709, SN 29500)	> 1871000 h (40 °C)

Insulation characteristics

Protection class	I (with PE connection)
Overvoltage category	III
Degree of pollution	2

Dimensions

Width	40 mm
Height	130 mm
Depth	115 mm

Installation dimensions

Installation distance right/left	0 mm / 0 mm
Installation distance top/bottom	50 mm / 50 mm

Mounting

Mounting type	DIN rail mounting
Assembly note	alignable: horizontally 0 mm, vertically 50 mm
Mounting position	horizontal DIN rail NS 35, EN 60715
With protective coating	no

Material specifications

Housing material	Metal
Type of housing	Steel sheet, zinc-plated
Side element version	Aluminum

Environmental and real-life conditions

Ambient conditions

Degree of protection	IP20
Ambient temperature (operation)	-25 °C ... 70 °C (> 55° C derating : 2.5%/K)
Ambient temperature (storage/transport)	-40 °C ... 85 °C
Climatic class	3K3 (in acc. with EN 60721)
Max. permissible relative humidity (operation)	≤ 95 % (at 25 °C, non-condensing)
Shock	15g in all directions in acc. with IEC 60068-2-27
Vibration (operation)	< 15 Hz, amplitude ±2.5 mm (according to IEC 60068-2-6)
	15 Hz ... 150 Hz, 2.3g, 90 min.

Standards and regulations

Rail applications	EN 50121-4
Standard – Electronic equipment for use in electrical power installations and their assembly into electrical power installations	EN 50178/VDE 0160 (PELV)

Standard – Limitation of mains harmonic currents	EN 61000-3-2
Standard - Electrical safety	EN 60950-1/VDE 0805 (SELV)
	EN 61558-2-17
Standard – Protection against shock currents, basic requirements for protective separation in electrical equipment	EN 50178
Standard – Safety extra-low voltage	EN 60950-1 (SELV)
	EN 60204 (PELV)
Standard - Safe isolation	DIN VDE 0100-410

Approvals

UL approvals	UL/C-UL listed UL 508
	UL/C-UL Recognized UL 60950-1

Conformity/Approvals

SIL in accordance with IEC 61508	0

EMC data

Electromagnetic compatibility	Conformance with EMC Directive 2014/30/EU
Low Voltage Directive	Conformance with Low Voltage Directive 2014/35/EC
EMC requirements for noise emission	EN 61000-6-3
	EN 61000-6-4
EMC requirements for noise immunity	EN 61000-6-1
	EN 61000-6-2

Electrostatic discharge

Standards/regulations	EN 61000-4-2

Electrostatic discharge

Contact discharge	6 kV (Test Level 3)
Discharge in air	8 kV (Test Level 3)
Comments	Criterion A

Electromagnetic HF field

Standards/regulations	EN 61000-4-3

Electromagnetic HF field

Frequency range	80 MHz ... 1 GHz
Test field strength	10 V/m
Frequency range	1 GHz ... 2 GHz
Test field strength	10 V/m
Frequency range	2 GHz ... 3 GHz
Test field strength	10 V/m
Comments	Criterion A

Fast transients (burst)

Standards/regulations	EN 61000-4-4

Fast transients (burst)

Input	4 kV (Test Level 4 - asymmetrical)
Output	4 kV (Test Level 4 - asymmetrical)
Signal	2 kV (Test Level 3 - asymmetrical)
Comments	Criterion A

Surge voltage load (surge)

Standards/regulations	EN 61000-4-5

Surge voltage load (surge)

Input	2 kV (Test Level 3 - symmetrical)
	4 kV (Test Level 4 - asymmetrical)
Output	1 kV (Test Level 2 - symmetrical)
	2 kV (Test Level 3 - asymmetrical)
Comments	Criterion A

Conducted interference

Standards/regulations	EN 61000-4-6

Conducted interference

Frequency range	0.15 MHz ... 80 MHz
Comments	Criterion A
Voltage	10 V (Test Level 3)

Voltage dips

Standards/regulations	EN 61000-4-11

Emitted interference

Standards/regulations	EN 61000-6-3
Radio interference voltage in acc. with EN 55011	EN 55011 (EN 55022) Class B, area of application: Industry and residential
Emitted radio interference in acc. with EN 55011	EN 55011 (EN 55022) Class B, area of application: Industry and residential

Drawings

Block diagram

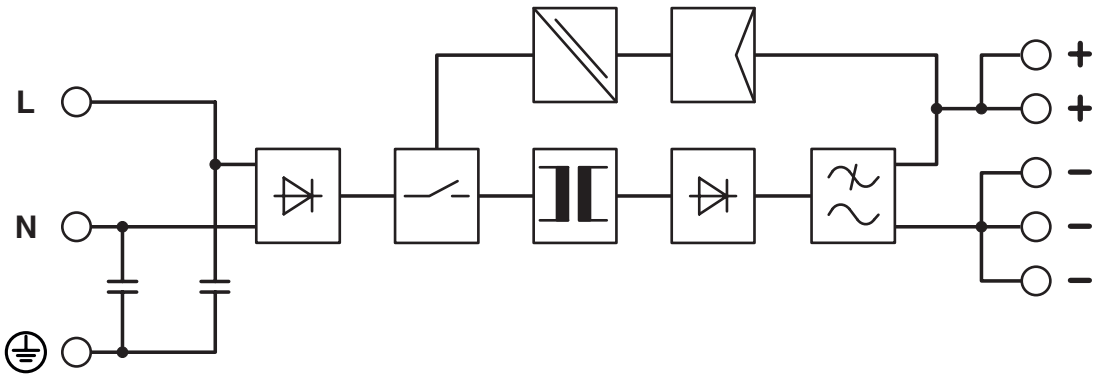

Approvals

To download certificates, visit the product detail page: https://www.phoenixcontact.com/gb/products/2866488

cUL Recognized
Approval ID: E211944

UL Recognized
Approval ID: E211944

EAC
Approval ID: RU S-DE.BL08.W.00764

EAC
Approval ID: RU S-DE.BL08.W.00764

UL Listed
Approval ID: E123528

cUL Listed
Approval ID: E123528

CoC / Compliance Statement
Approval ID: 16-198-00

Classifications

ECLASS

ECLASS-13.0	27040701

ETIM

ETIM 9.0	EC002540

UNSPSC

UNSPSC 21.0	39121000

Environmental product compliance

EU RoHS

Fulfills EU RoHS substance requirements	Yes
Exemption	7(a), 7(c)-I

China RoHS

Environment friendly use period (EFUP)	EFUP-25
	An article-related China RoHS declaration table can be found in the download area for the respective article under "Manufacturer declaration". For all articles with EFUP-E, no China RoHS declaration table issued and required.

EU REACH SVHC

REACH candidate substance (CAS No.)	Lead(CAS: 7439-92-1)
SCIP	8eb270a4-46a3-4c13-95cb-778b38a4244c

EF3.1 Climate Change

CO2e kg	19.283 kg CO2e

Phoenix Contact 2026 © - all rights reserved
https://www.phoenixcontact.com

PHOENIX CONTACT Ltd
Halesfield 13, Telford
Shropshire, TF7 4PG
01952 681700
info@phoenixcontact.co.uk