# MINI-PS- 12- 24DC/24DC/1 - DC/DC converter

2866284

https://www.phoenixcontact.com/gb/products/2866284

Please be informed that the data shown in this PDF document is generated from our online catalog. Please find the complete data in the user documentation. Our general terms of use for downloads are valid.



Please use the following items in new systems: 1066703, 1066716, 1066718, 1066714.
Primary-switched MINI DC/DC converter for DIN rail mounting, input: 12 - 24 V DC, output: 24 V DC/1 A

## Product description

MINI DC/DC converter for MCR technology.
DC/DC converters alter the voltage level, regenerate the voltage at the end of long cables or enable the creation of independent supply systems by means of electrical isolation.

## Your advantages

- Electrical isolation: for setting up independent supply systems
- Support conversion to various voltage levels
- Constant voltage: output voltage regenerated even at the end of long cables

ELEKTROGERÄTE RÜCKNAHME

## Commercial data

| | |
|---|---|
| Item number | 2866284 |
| Packing unit | 1 pc |
| Minimum order quantity | 1 pc |
| Sales key | CMDM43 |
| Product key | CMDM43 |
| GTIN | 4017918960902 |
| Weight per piece (including packing) | 236 g |
| Weight per piece (excluding packing) | 235 g |
| Customs tariff number | 85044095 |

| | |
|---|---|
| Country of origin | CN |

# Technical data

## Input data

DC operation

| | |
|---|---|
| Nominal input voltage range | 12 V DC ... 24 V DC |
| Input voltage range | 10 V DC ... 32 V DC |
| Wide-range input | yes |
| Input voltage range DC | 10 V DC ... 32 V DC |
| Voltage type of supply voltage | DC |
| Inrush current | < 15 A (typical) |
| Inrush current integral ($I^2t$) | 1.8 $A^2s$ |
| Frequency range DC | 0 Hz |
| Mains buffering time | typ. 3 ms (12 V DC) |
| | typ. 20 ms (24 V DC) |
| Current consumption | 2.6 A (12 V DC) |
| | 1.3 A (24 V DC) |
| Typical response time | < 0.5 s |
| Input fuse | 6.3 A (slow-blow, internal) |

## Output data

| | |
|---|---|
| Efficiency | > 83 % (at 24 V DC and nominal values) |
| Output characteristic | U/I |
| Nominal output voltage | 24 V DC ±1 % |
| Setting range of the output voltage ($U_{Set}$) | 22.5 V DC ... 28.5 V DC (> 24 V DC, constant capacity restricted) |
| Nominal output current ($I_N$) | 1 A (-25 °C ... 60 °C) |
| Derating | 60 °C ... 70 °C (2.5 %/K) |
| Residual ripple | < 30 $mV_{PP}$ (20 MHz) |
| Short-circuit-proof | yes |
| Output power | 24 W |
| Peak switching voltages nominal load | < 100 $mV_{PP}$ (20 MHz) |
| Maximum no-load power dissipation | < 1.2 W |
| Power loss nominal load max. | < 5 W |
| Connection in parallel | yes, for assembling redundant systems and increasing efficiency |
| Connection in series | yes |
| Fuse protection (secondary side) | electronic |

Signal: DC OK active

| | |
|---|---|
| Output description | $U_{OUT}$ > 21.5 V: High signal |
| Maximum switching voltage | ≤ 24 V DC |
| Output voltage | + 24 V (Signal) |
| Continuous load current | ≤ 20 mA |

## Connection data

Input

| | |
|---|---|
| Connection method | Pluggable screw connection |
| Conductor cross-section, rigid min. | 0.2 mm² |
| Conductor cross-section, rigid max. | 2.5 mm² |
| Conductor cross-section flexible min. | 0.2 mm² |
| Conductor cross-section flexible max. | 2.5 mm² |
| Conductor cross-section AWG min. | 24 |
| Conductor cross-section AWG max. | 14 |
| Stripping length | 7 mm |
| Screw thread | M3 |

Output

| | |
|---|---|
| Connection method | Pluggable screw connection |
| Conductor cross-section, rigid min. | 0.2 mm² |
| Conductor cross-section, rigid max. | 2.5 mm² |
| Conductor cross-section flexible min. | 0.2 mm² |
| Conductor cross-section flexible max. | 2.5 mm² |
| Conductor cross-section AWG min. | 24 |
| Conductor cross-section AWG max. | 14 |
| Stripping length | 7 mm |
| Screw thread | M3 |

Signal

| | |
|---|---|
| Conductor cross-section, rigid min. | 0.2 mm² |
| Conductor cross-section, rigid max. | 2.5 mm² |
| Conductor cross-section flexible min. | 0.2 mm² |
| Conductor cross-section flexible max. | 2.5 mm² |
| Conductor cross-section AWG min. | 24 |
| Conductor cross-section AWG max. | 14 |
| Screw thread | M3 |
| Tightening torque, min | 0.5 Nm |
| Tightening torque max | 0.6 Nm |

## Signaling

| | |
|---|---|
| Types of signaling | LED |
| | Active switching output |
| Operating voltage display | Green LED |

Signal output: DC OK active

| | |
|---|---|
| Status display | "DC OK" LED green |

## Electrical properties

| | |
|---|---|
| Number of phases | 1 |
| Insulation voltage input/output | 1.5 kV (type test) |
| | 1 kV (routine test) |

## Product properties

| | |
|---|---|
| Product type | DC/DC converters |
| Product family | MINI POWER |
| MTBF (IEC 61709, SN 29500) | > 2569000 h (40 °C) |

Insulation characteristics

| | |
|---|---|
| Protection class | III |

## Dimensions

| | |
|---|---|
| Width | 22.5 mm |
| Height | 99 mm |
| Depth | 107 mm |

Installation dimensions

| | |
|---|---|
| Installation distance right/left | 0 mm / 0 mm (≤ 70 °C) |
| Installation distance top/bottom | 50 mm / 50 mm (≤ 70 °C) |

## Mounting

| | |
|---|---|
| Assembly note | alignable: horizontally 0 mm, vertically 50 mm |
| Mounting position | horizontal DIN rail NS 35, EN 60715 |
| With protective coating | no |

## Material specifications

| | |
|---|---|
| Housing material | Plastic |
| Type of housing | Polyamide PA, color: green |

## Environmental and real-life conditions

Ambient conditions

| | |
|---|---|
| Degree of protection | IP20 |
| Ambient temperature (operation) | -25 °C ... 70 °C (> 60 °C Derating: 2,5 %/K) |
| Ambient temperature (storage/transport) | -40 °C ... 85 °C |
| Max. permissible relative humidity (operation) | ≤ 95 % (at 25 °C, non-condensing) |
| Temp code | T4A ≤ 60 °C |
| | T3C ≤ 70 °C |

## Standards and regulations

| | |
|---|---|
| Rail applications | EN 50121-4 |
| Standard – Electronic equipment for use in electrical power installations and their assembly into electrical power installations | EN 50178/VDE 0160 (PELV) |
| Standard - Electrical safety | EN 60950-1/VDE 0805 (SELV) |
| Standard - Safe isolation | DIN VDE 0100-410 |
| | DIN VDE 0106-101 |

## Approvals

| | |
|---|---|
| Shipbuilding approval | DNV GL (EMC A) |

| | |
|---|---|
| UL approvals | UL/C-UL listed UL 508 |
| | UL/C-UL Recognized UL 60950-1 |
| | UL ANSI/ISA-12.12.01 Class I, Division 2, Groups A, B, C, D (Hazardous Location) |

## EMC data

| | |
|---|---|
| Electromagnetic compatibility | Conformance with EMC Directive 2014/30/EU |
| Low Voltage Directive | Conformance with Low Voltage Directive 2014/35/EC |
| EMC requirements for noise emission | EN 61000-6-3 |
| | EN 61000-6-4 |
| EMC requirements for noise immunity | EN 61000-6-1 |
| | EN 61000-6-2 |

Noise emission

| | |
|---|---|
| Standards/regulations | EN 55011 (EN 55022) |

Electrostatic discharge

| | |
|---|---|
| Standards/regulations | EN 61000-4-2 |
| Housing | > Level 3 |

Electrostatic discharge

| | |
|---|---|
| Contact discharge | 8 kV (Contact discharge) |
| Discharge in air | 8 kV (Air discharge) |
| Comments | Criterion B |

Electromagnetic HF field

| | |
|---|---|
| Standards/regulations | EN 61000-4-3 |

Electromagnetic HF field

| | |
|---|---|
| Frequency range | 80 MHz ... 3 GHz |
| Test field strength | 10 V/m |
| Comments | Criterion A |

Fast transients (burst)

| | |
|---|---|
| Standards/regulations | EN 61000-4-4 |

Fast transients (burst)

| | |
|---|---|
| Input | 4 kV (level 4 - asymmetrical: conductor to ground) |
| Output | 2 kV (level 3 - asymmetrical: conductor to ground) |
| Signal | 1 kV |
| Comments | Level 2 - asymmetrical cable to ground |

Surge voltage load (surge)

| | |
|---|---|
| Standards/regulations | EN 61000-4-5 |

Surge voltage load (surge)

| | |
|---|---|
| Input | 2 kV (Level 3) |
| | 1 kV (Level 3) |

Conducted interference

| | |
|---|---|
| Standards/regulations | EN 61000-4-6 |

Conducted interference

| | |
|---|---|
| Input/Output | Level 3 |
| Frequency range | 0.15 MHz ... 80 MHz (10 V) |

Voltage dips

| | |
|---|---|
| Standards/regulations | EN 61000-4-11 |

Emitted interference

| | |
|---|---|
| Standards/regulations | EN 61000-6-3 |
| Radio interference voltage in acc. with EN 55011 | EN 55011 (EN 55022) Class B, area of application: Industry and residential |
| Emitted radio interference in acc. with EN 55011 | EN 55011 (EN 55022) Class B, area of application: Industry and residential |

## Drawings

Diagram

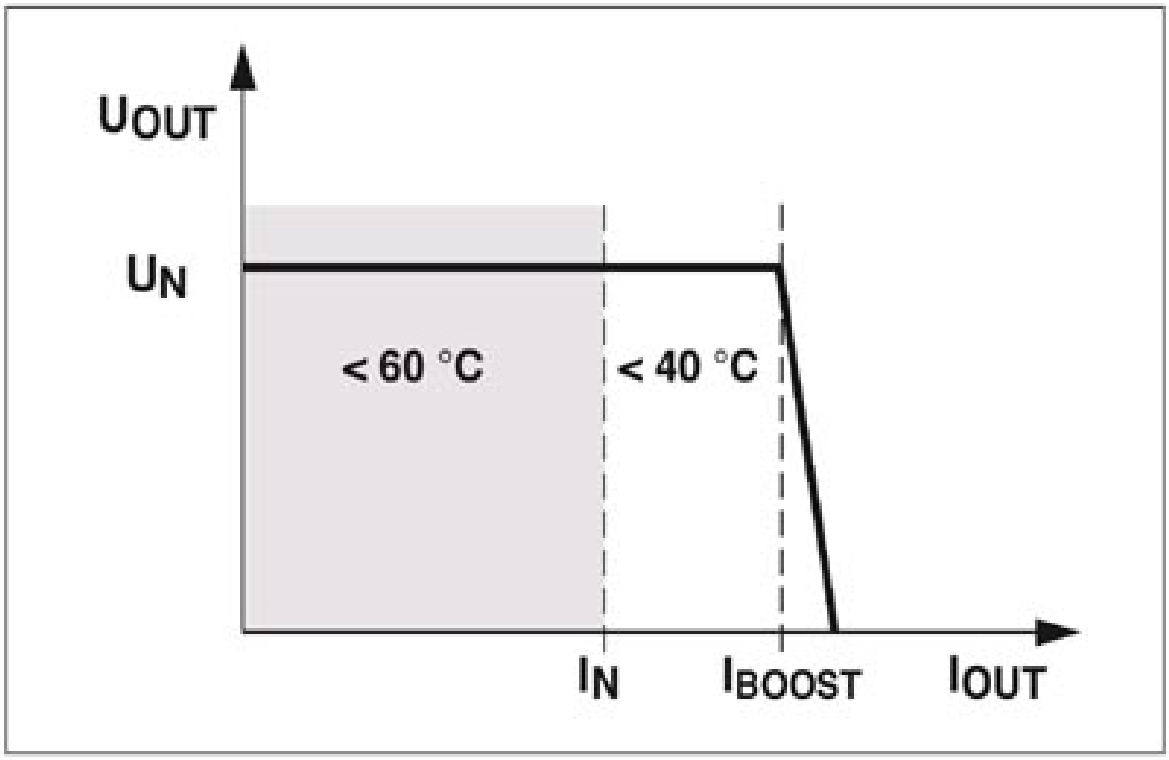


POWER BOOST

Block diagram

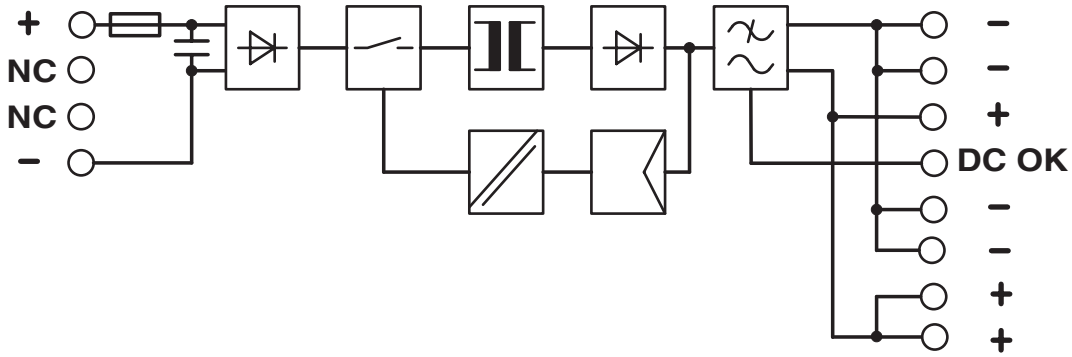

## Approvals

To download certificates, visit the product detail page: https://www.phoenixcontact.com/gb/products/2866284

**cUL Recognized**
Approval ID: FILE E 211944

**UL Recognized**
Approval ID: E211944

**EAC**
Approval ID: RU S-DE.BL08.W.00764

**UL Listed**
Approval ID: E123528

**cUL Listed**
Approval ID: E123528

**DNV**
Approval ID: TAA000030X

**CoC / Compliance Statement**
Approval ID: 19-049-00

**cUL Listed**
Approval ID: E199827

**UL Listed**
Approval ID: E199827

## Classifications

### ECLASS

| | |
|---|---|
| ECLASS-13.0 | 27040701 |
| ECLASS-15.0 | 27040701 |

### ETIM

| | |
|---|---|
| ETIM 10.0 | EC002540 |

### UNSPSC

| | |
|---|---|
| UNSPSC 21.0 | 39121000 |

## Environmental product compliance

EU RoHS

| | |
|---|---|
| Fulfills EU RoHS substance requirements | Yes |
| Exemption | 7(a), 7(c)-I |

China RoHS

| | |
|---|---|
| Environment friendly use period (EFUP) | EFUP-25 |
| | An article-related China RoHS declaration table can be found in the download area for the respective article under "Manufacturer declaration". For all articles with EFUP-E, no China RoHS declaration table issued and required. |

EU REACH SVHC

| | |
|---|---|
| REACH candidate substance (CAS No.) | Lead(CAS: 7439-92-1) |
| SCIP | 8f7f11c0-5663-434c-98de-6d9c26b5aa5a |

EF3.1 Climate Change

| | |
|---|---|
| CO2e kg | 18.315 kg CO2e |


Phoenix Contact 2026 © - all rights reserved
https://www.phoenixcontact.com



PHOENIX CONTACT Ltd
Halesfield 13, Telford
Shropshire, TF7 4PG
01952 681700
info@phoenixcontact.co.uk