QUINT-DC-UPS/24DC/20 - Uninterruptible power supply

2866239

https://www.phoenixcontact.com/gb/products/2866239

Please be informed that the data shown in this PDF document is generated from our online catalog. Please find the complete data in the user documentation. Our general terms of use for downloads are valid.



Uninterruptible power supply 24 V/20 A. In the download area, there is a clearly arranged selection table available with load currents and buffer times, as well as charging times after buffer mode.

Commercial data

Item number	2866239
Packing unit	1 pc
Minimum order quantity	1 pc
Sales key	CMUP43
Product key	CMUP43
GTIN	4017918959708
Weight per piece (including packing)	980 g
Weight per piece (excluding packing)	800 g
Customs tariff number	85371091
Country of origin	CN

Technical data

Input data

DC operation

Input voltage	24 V DC
Input voltage range	22.5 V DC ... 30 V DC
Wide-range input	no
Input voltage range DC	22.5 V DC ... 30 V DC
Voltage type of supply voltage	DC
Buffer period	5 min (10 A)
	20 min (20 A)
Current consumption	approx. 0.1 A
	2 A (charging process)
	22 A (max.)
Fixed backup threshold	< 22 V DC
Variable connect threshold	(U_{IN} - 1 V)/0.1 s
Input fuse	25 A (slow-blow, internal)

Output data

Efficiency	> 95 %
Nominal output voltage	24 V DC (Normal operation: U_{in}- 0.5 V DC, buffer mode: 27.9 to 19.2 V DC)
Nominal output current (I_N)	20 A
Bridging time	20 min
Output power	480 W
Power dissipation	15 W
	20 W
Connection in parallel	yes, for increasing the buffer period
Connection in series	yes

Mains operation

Nominal output voltage	24 V DC
Nominal output current (I_N)	20 A

Battery operation

Nominal output voltage	24 V DC
Nominal output current (I_N)	20 A

Signal

Output description	Power OK

Signal: floating

Output description	Alarm
Maximum switching voltage	≤ 30 V AC/DC
Continuous load current	≤ 1 A

Signal: floating

Output description	Battery Charge
Maximum switching voltage	≤ 30 V AC/DC
Continuous load current	≤ 1 A

Signal: floating

Output description	Battery Mode
Maximum switching voltage	≤ 30 V AC/DC
Continuous load current	≤ 1 A

Energy storage

Nominal capacity range	3.4 Ah ... 38 Ah
Battery module service life	6 Years (20 °C)
Latest startup date (battery only)	9 Months (20 °C ... 30 °C)
	6 Months (30 °C ... 40 °C)
Memory medium	external, battery 3.4 Ah / 7.2 Ah / 12 Ah
Network management	Yes

Connection data

Input

Connection method	Screw connection
Conductor cross-section, rigid min.	0.5 mm²
Conductor cross-section, rigid max.	16 mm²
Conductor cross-section flexible min.	0.5 mm²
Conductor cross-section flexible max.	10 mm²
Conductor cross-section AWG min.	20
Conductor cross-section AWG max.	6
Stripping length	10 mm
Screw thread	M4

Output

Connection method	Screw connection
Conductor cross-section, rigid min.	0.5 mm²
Conductor cross-section, rigid max.	16 mm²
Conductor cross-section flexible min.	0.5 mm²
Conductor cross-section flexible max.	10 mm²
Conductor cross-section AWG min.	20
Conductor cross-section AWG max.	6
Stripping length	10 mm
Screw thread	M4

Signal

Conductor cross-section, rigid min.	0.2 mm²
Conductor cross-section, rigid max.	4 mm²

Conductor cross-section flexible min.	0.2 mm²
Conductor cross-section flexible max.	2.5 mm²
Conductor cross-section AWG min.	24
Conductor cross-section AWG max.	12
Screw thread	M3
Tightening torque, min	0.5 Nm
Tightening torque max	0.6 Nm

Signaling

Types of signaling	LED
Operating voltage display	Green LED

Signal output

Status display	LED "Power OK" green
Note on status display	Power OK: LED permanently lit

Signal output: floating

Status display	LED (red)
Note on status display	Alarm: LED permanently lit

Signal output: floating

Status display	LED flashing yellow
Note on status display	Battery charge: LED flashing

Signal output: floating

Status display	LED (yellow)
Note on status display	Battery mode: LED permanently lit

Electrical properties

Insulation voltage input/output	1 kV (routine test)
	1 kV (type test)

Product properties

Product type	DC UPS
Product family	QUINT DC UPS
MTBF (IEC 61709, SN 29500)	> 500000 h

Insulation characteristics

Protection class	II (in closed control cabinet)

Dimensions

Width	66 mm
Height	130 mm
Depth	125 mm

Installation dimensions

Installation distance right/left	5 mm / 5 mm

Installation distance top/bottom	50 mm / 50 mm

Alternative assembly

Width	122 mm
Height	130 mm
Depth	69 mm

Mounting

Mounting type	DIN rail mounting
Assembly note	alignable: horizontally 0 mm, vertically 50 mm
Mounting position	horizontal DIN rail NS 35, EN 60715

Material specifications

Housing material	Metal
Type of housing	AluNox (AlMg1)

Environmental and real-life conditions

Ambient conditions

Degree of protection	IP20
Ambient temperature (operation)	-25 °C ... 70 °C
Ambient temperature (storage/transport)	-40 °C ... 85 °C
Max. permissible relative humidity (operation)	95 % (at 25 °C, non-condensing)

Standards and regulations

Standard – Electronic equipment for use in electrical power installations and their assembly into electrical power installations	EN 50178/VDE 0160 (PELV)
Standard - Electrical safety	EN 60950-1/VDE 0805 (SELV)
	EN 61558-2-17
Standard - Safe isolation	DIN VDE 0100-410
Standard - Safety of transformers	EN 61558-2-17

Approvals

Shipbuilding approval	DNV GL (EMC A), ABS
UL approvals	UL/C-UL listed UL 508
	UL/C-UL Recognized UL 60950-1
	UL/C-UL Listed UL 1604 Class I, Division 2, Groups A, B, C, D

EMC data

Electromagnetic compatibility	Conformance with EMC Directive 2014/30/EU
Low Voltage Directive	Conformance with Low Voltage Directive 2014/35/EC
Noise immunity	EN 61000-6-2:2005

Noise emission

Standards/regulations	EN 55011 (EN 55022)

Drawings

Diagram

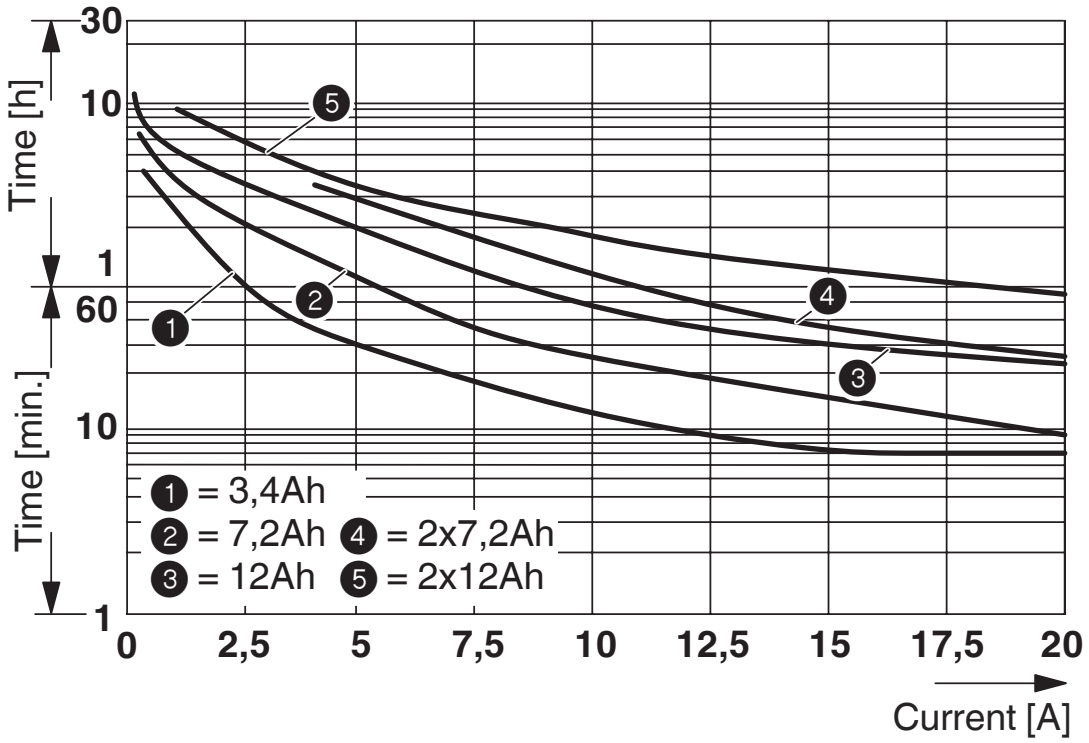

Block diagram

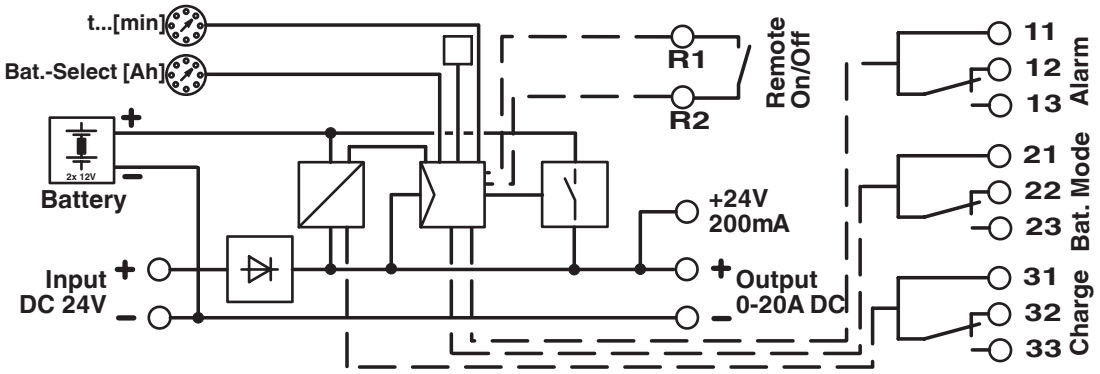

Classifications

UNSPSC

UNSPSC 21.0	39121011

Environmental product compliance

EU RoHS

Fulfills EU RoHS substance requirements	Yes
Exemption	7(a), 7(c)-I

China RoHS

Environment friendly use period (EFUP)	EFUP-25
	An article-related China RoHS declaration table can be found in the download area for the respective article under "Manufacturer declaration". For all articles with EFUP-E, no China RoHS declaration table issued and required.

EU REACH SVHC

REACH candidate substance (CAS No.)	Lead(CAS: 7439-92-1)

Phoenix Contact 2026 © - all rights reserved
https://www.phoenixcontact.com

PHOENIX CONTACT Ltd
Halesfield 13, Telford
Shropshire, TF7 4PG
01952 681700
info@phoenixcontact.co.uk