EMD-FL-C-10 - Monitoring relay

2866022

https://www.phoenixcontact.com/gb/products/2866022

Please be informed that the data shown in this PDF document is generated from our online catalog. Please find the complete data in the user documentation. Our general terms of use for downloads are valid.



Monitoring relay for monitoring 1-phase currents of 0 … 10 A AC/DC, overcurrent/undercurrent or window, error memory, wide range power supply unit, 2 changeover contacts

Product description

Increasingly higher demands are being placed on safety and system availability - across all sectors. Processes are becoming more and more complex, not only in mechanical engineering and the chemical industry, but also in plant and automation technology. Demands on power engineering are also increasing constantly.
Error-free and therefore cost-effective operation can only be achieved through continuous monitoring of important network and system parameters. Electronic monitoring relays in the EMD series are available for a wide range of monitoring tasks to avoid the consequences of errors or to keep them within limits.
The operating states are indicated using colored LEDs, errors that may occur can be sent to a control system via a floating contact or can shut down a part of the system. Some device versions are equipped with startup and response delays in order to briefly tolerate measured values outside the set monitoring range.

Your advantages

- Variable supply voltage range
- Adjustable via potentiometer on the front
- Separately adjustable startup and response delays

Commercial data

Item number	2866022
Packing unit	1 pc
Minimum order quantity	1 pc
Sales key	DK6632
Product key	DK6632
GTIN	4017918975005
Weight per piece (including packing)	166.9 g
Weight per piece (excluding packing)	165.81 g
Customs tariff number	85364900
Country of origin	AT

Technical data

Product properties

Product type	Current monitoring relay
Operating mode	100% operating factor
Mechanical service life	approx. 2x 10^7 cycles

Insulation characteristics

Insulation	Basic insulation
Overvoltage category	III
Pollution degree	2

Electrical properties

Service life electrical	2x 10^5 cycles at ohmic load, 1000 VA
Maximum power dissipation for nominal condition	1 W
Mains type	1-phase
Rated insulation voltage	300 V
Rated surge voltage	4 kV

Supply

Supply voltage range	24 V AC ... 240 V AC -15 % ... +10 %
	24 V DC ... 240 V DC -20 % ... +25 %
Nominal power consumption	4.5 VA (1.5 W)

Input data

Input name	Measuring input
Measured value	DC, AC sine
Input current range	0 mA ... 100 mA (Connection terminal blocks: I1 and GND)
	0 A ... 1 A (Connection terminal blocks: I2 and GND)
	0 A ... 10 A (Connection terminal blocks: I3 and GND)
Overload capacity	800 mA (at I_N = 100 mA)
	3 A (at I_N = 1 A)
	12 A (at I_N = 10 A)
Input resistance current input	470 mΩ (at I_N = 100 mA)
	47 mΩ (at I_N = 1 A)
	5 mΩ (at I_N = 10 A)
Frequency range	48 Hz ... 400 Hz
Maximum temperature coefficient	< 0.1 %/K
Setting range for response delay	0.1 s ... 10 s
Setting range for starting delay	0 s ... 10 s
Min. setting range	5 % ... 95 % (from I_N)
Max. setting range	10 % ... 100 % (from I_N)
Function	Overcurrent
	Undercurrent

	Window
	Error memory
Basic accuracy	± 5 % (of scale end value)
Setting accuracy	≤ 5 % (of scale end value)
Repeat accuracy	≤ 2 %
Recovery time	500 ms

Output data

Switching

Contact switching type	2 floating changeover contacts
Maximum switching voltage	250 V AC
Interrupting rating (ohmic load) max.	750 VA (3 A/250 V AC, module aligned, ≤ 5 mm spacing)
	1250 VA (5 A/250 V AC, module not aligned, ≥ 5 mm spacing)
Output fuse	5 A (fast-blow)

Connection data

Connection method	Screw connection
Stripping length	8 mm
Conductor cross-section rigid	0.5 mm² ... 2.5 mm²
Conductor cross-section flexible	0.25 mm² ... 2.5 mm²
Conductor cross-section AWG	20 ... 14

Dimensions

Width	22.5 mm
Height	90 mm
Depth	113 mm

Material specifications

Color	green (RAL 6021)
Housing insulation material	Polyamide PA, self-extinguishing

Environmental and real-life conditions

Ambient conditions

Degree of protection (Housing)	IP40 (Housing)
Degree of protection (Connection terminal blocks)	IP20 (Connection terminal blocks)
Ambient temperature (operation)	-25 °C ... 55 °C
	-25 °C ... 40 °C (corresponds to UL 508)
Ambient temperature (storage/transport)	-25 °C ... 70 °C
Permissible humidity (operation)	15 % ... 85 %

Approvals

CE

Certificate	CE-compliant

UL, USA/Canada

Identification	UL/C-UL Listed UL 508

EMC data

Electromagnetic compatibility	Conformance with EMC directive
Low Voltage Directive	Conformance with Low Voltage Directive
Noise immunity	EN 61000-6-2

Noise emission

Standards/regulations	EN 61000-6-4

Standards and regulations

Standards/regulations	IEC 60947-5-1

Mounting

Mounting type	DIN rail mounting
Assembly note	on standard DIN rail NS 35 in accordance with EN 60715
Mounting position	any

Drawings

Block diagram

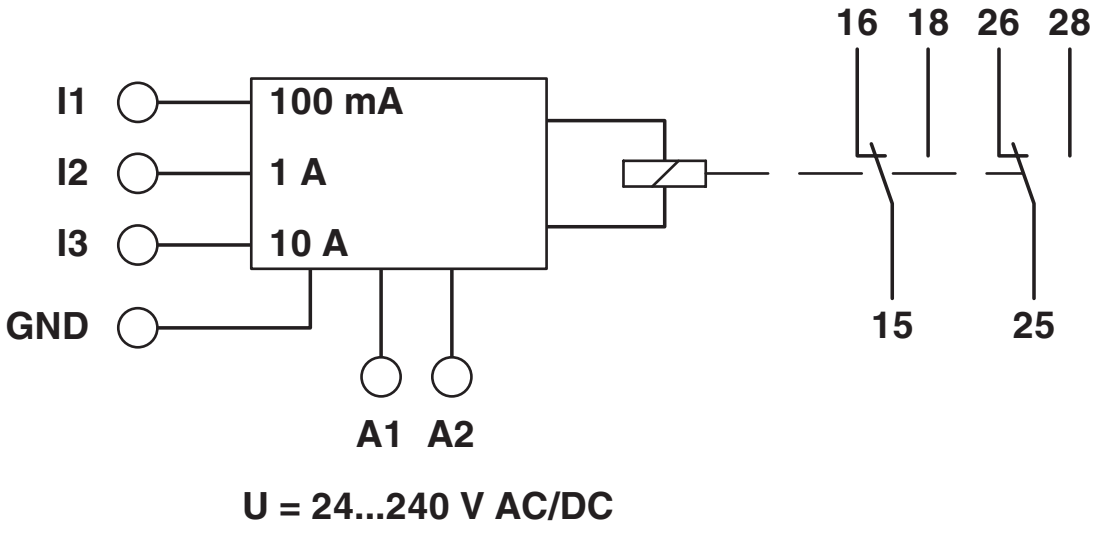

Approvals

To download certificates, visit the product detail page: https://www.phoenixcontact.com/gb/products/2866022

UL Listed
Approval ID: FILE E 172140

cUL Listed
Approval ID: FILE E 172140

Classifications

ECLASS

ECLASS-13.0	27371802
ECLASS-15.0	27371802

ETIM

ETIM 10.0	EC001440

UNSPSC

UNSPSC 21.0	41113600

Environmental product compliance

EU RoHS

Fulfills EU RoHS substance requirements	Yes, No exemptions

China RoHS

Environment friendly use period (EFUP)	EFUP-E
	No hazardous substances above the limits

EU REACH SVHC

REACH candidate substance (CAS No.)	No substance above 0.1 wt%

Phoenix Contact 2026 © - all rights reserved
https://www.phoenixcontact.com

PHOENIX CONTACT Ltd
Halesfield 13, Telford
Shropshire, TF7 4PG
01952 681700
info@phoenixcontact.co.uk