# MINI MCR-SL-2CP-I-I - Input isolator

2864655

https://www.phoenixcontact.com/gb/products/2864655

Please be informed that the data shown in this PDF document is generated from our online catalog. Please find the complete data in the user documentation. Our general terms of use for downloads are valid.



MCR passive isolator, 2-channel, for the electrical isolation of current signals without auxiliary power, with screw connection

## Your advantages

- Voltage drop at isolating amplifier of just 1.7 V
- Does not require additional auxiliary voltage
- Two channels on a design width of just 6.2 mm
- Highly compact 2-conductor passive isolators for the electrical isolation and filtering of standard analog signals
- Supplied by an input loop

## Commercial data

| | |
|---|---|
| Item number | 2864655 |
| Packing unit | 1 pc |
| Minimum order quantity | 1 pc |
| Sales key | DK1131 |
| Product key | DK1131 |
| GTIN | 4017918974893 |
| Weight per piece (including packing) | 61.3 g |
| Weight per piece (excluding packing) | 52.3 g |
| Customs tariff number | 85437090 |
| Country of origin | DE |

## Technical data

### Product properties

| | |
|---|---|
| Product type | Passive separator |
| Product family | MINI Analog |
| No. of channels | 2 |

### Electrical properties

| | |
|---|---|
| Electrical isolation | 2-way isolation |
| Electrical isolation between input and output | yes |
| Limit frequency (3 dB) | 75 Hz |
| Maximum power dissipation for nominal condition | 64 mW |
| Signal transmission behavior | In = Out |
| Step response (10-90%) | 5 ms (at 600 Ω load) |
| Maximum temperature coefficient | ≤ 0.002 %/K (of measured value / 100 Ω load) |
| Temperature coefficient, typical | < 0.002 %/K (of measured value / 100 Ω load) |
| Maximum transmission error | ≤ 0.1 % (of final value) |
| Additional error, load-dependent | < 0.03 % (of measured value / 100 Ω load) |

Electrical isolation

| | |
|---|---|
| Overvoltage category | II |
| Pollution degree | 2 |

Electrical isolation Input/output IEC/EN 61010

| | |
|---|---|
| Standards/regulations | IEC/EN 61010 |
| Rated insulation voltage | 50 V AC/DC |
| Test voltage | 1.5 kV AC (50 Hz, 60 s) |
| Insulation | Basic insulation |

Supply

| | |
|---|---|
| Supply voltage range | loop-powered, no external supply necessary |
| Power consumption | 34 mW (per channel) |

### Input data

Signal: Current

| | |
|---|---|
| Number of inputs | 2 |
| Configurable/programmable | no |
| Max. voltage input signal | 18 V |
| Current input signal | 0 mA ... 20 mA |
| | 4 mA ... 20 mA |
| Max. current input signal | 40 mA |
| Response current | approx. 190 µA |
| Input voltage limitation | < 2 V (20 mA) |
| Voltage dissipation | 1.9 V (I = 20 mA) |

## Output data

Signal: Current

| | |
|---|---|
| Number of outputs | 2 |
| Configurable/programmable | no |
| Current output signal | 0 mA ... 20 mA |
| | 4 mA ... 20 mA |
| Load/output load current output | < 600 Ω (at I = 20 mA output signal) |
| Ripple | < 10 $mV_{rms}$ (600 Ω) |

## Connection data

| | |
|---|---|
| Connection method | Screw connection |
| Stripping length | 12 mm |
| Screw thread | M3 |
| Conductor cross-section rigid | 0.2 mm² ... 2.5 mm² |
| Conductor cross-section flexible | 0.2 mm² ... 2.5 mm² |
| Conductor cross-section AWG | 26 ... 12 |

## Dimensions

| | |
|---|---|
| Dimensional drawing | 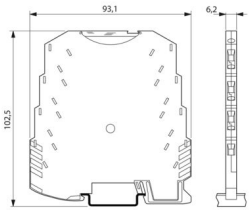 |
| Width | 6.2 mm |
| Height | 93.1 mm |
| Depth | 101.2 mm |

## Material specifications

| | |
|---|---|
| Color | green (RAL 6021) |
| Housing material | PBT |
| Fire protection for rail vehicles (DIN EN 45545-2) R22 | HL 1 - HL 2 |
| Fire protection for rail vehicles (DIN EN 45545-2) R23 | HL 1 - HL 2 |
| Fire protection for rail vehicles (DIN EN 45545-2) R24 | HL 1 - HL 2 |

## Environmental and real-life conditions

Ambient conditions

| | |
|---|---|
| Degree of protection | IP20 |
| Ambient temperature (operation) | -20 °C ... 65 °C |
| Ambient temperature (storage/transport) | -40 °C ... 85 °C |
| Altitude | ≤ 2000 m |
| Permissible humidity (operation) | 5 % ... 95 % (non-condensing) |

## Approvals

CE

| | |
|---|---|
| Certificate | CE-compliant |

UL, USA/Canada

| | |
|---|---|
| Identification | UL 508 Recognized |
| | Class I, Div. 2, Groups A, B, C, D |

## EMC data

| | |
|---|---|
| Electromagnetic compatibility | Conformance with EMC directive |
| Noise immunity | EN 61000-6-2 |
| Note | When being exposed to interference, there may be minimal deviations. |

Noise emission

| | |
|---|---|
| Standards/regulations | EN 61000-6-4 |

Electrostatic discharge

| | |
|---|---|
| Standards/regulations | EN 61000-4-2 |

Electrostatic discharge

| | |
|---|---|
| Comments | Criterion B |

Electromagnetic HF field

| | |
|---|---|
| Designation | Electromagnetic RF field |
| Standards/regulations | EN 61000-4-3 |
| Evaluation criterion | A |

Fast transients (burst)

| | |
|---|---|
| Designation | Fast transients (burst) |
| Standards/regulations | EN 61000-4-4 |
| Evaluation criterion | B |

Surge current load (surge)

| | |
|---|---|
| Standards/regulations | EN 61000-4-5 |

Surge current load (surge)

| | |
|---|---|
| Comments | Criterion B |

Conducted interference

| | |
|---|---|
| Designation | Conducted interferences |
| Standards/regulations | EN 61000-4-6 |
| Evaluation criterion | A |

## Standards and regulations

| | |
|---|---|
| Electrical isolation | 2-way isolation |

## Mounting

| | |
|---|---|
| Mounting type | DIN rail mounting |
| Assembly note | The DIN rail connector can be used for bridging the supply voltage. It can be snapped onto a 35 mm EN 60715 DIN rail. |
| Mounting position | any |

## Drawings

Dimensional drawing

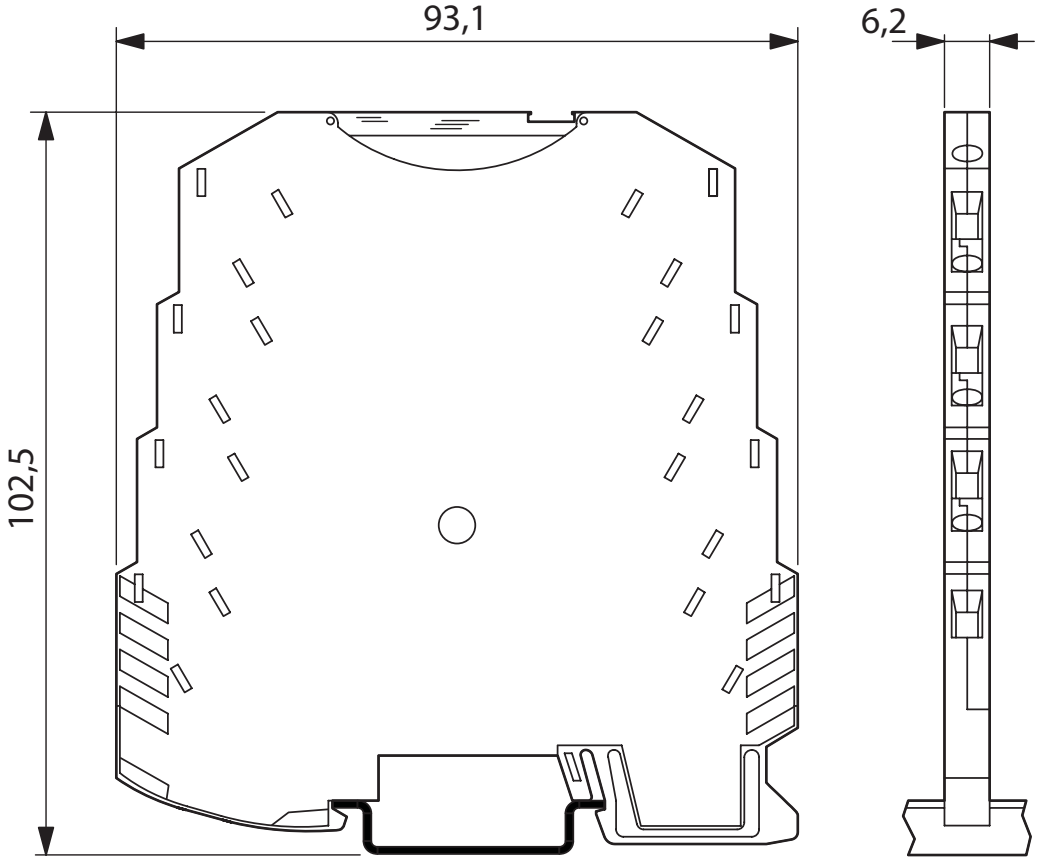


Application drawing

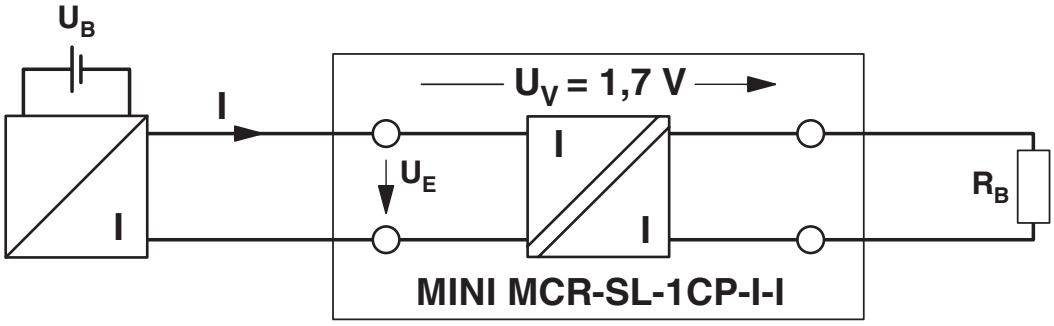

Block diagram

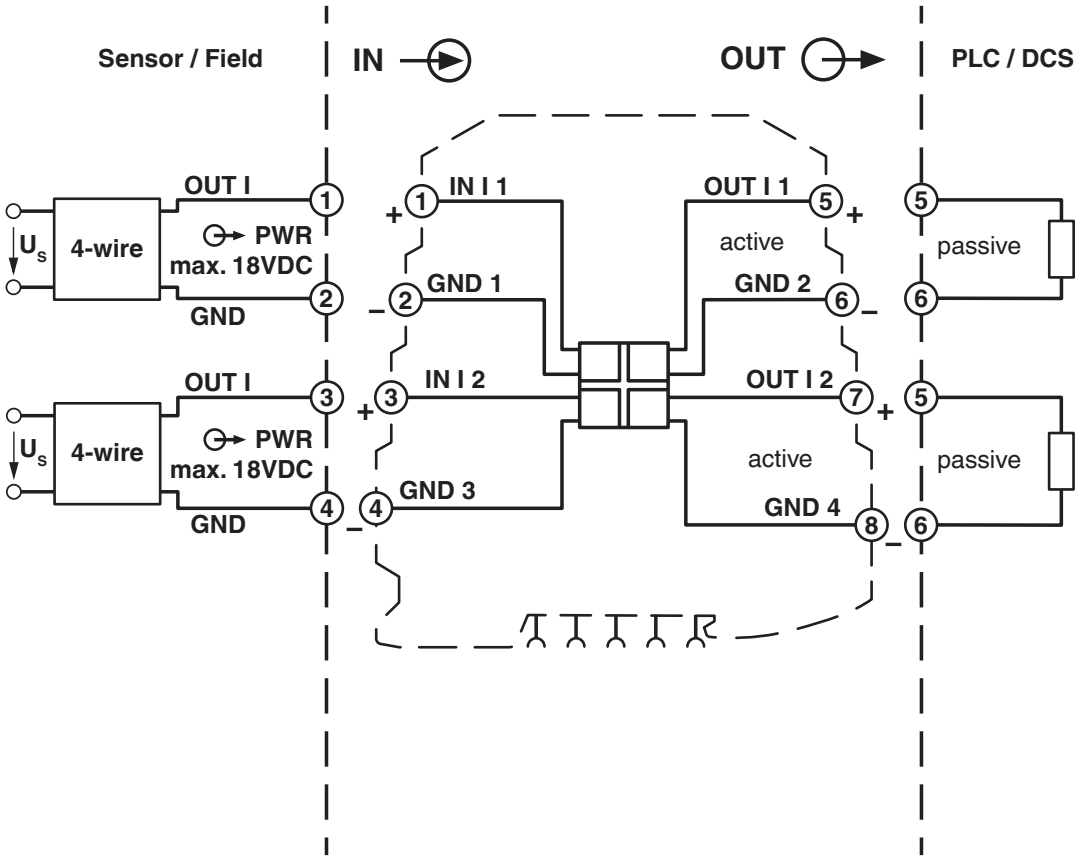

## Approvals

To download certificates, visit the product detail page: https://www.phoenixcontact.com/gb/products/2864655

**cUL Recognized**
Approval ID: FILE E 123528

**UL Recognized**
Approval ID: FILE E 123528

**cUL Recognized**
Approval ID: E199827

**UL Recognized**
Approval ID: E199827

## Classifications

### ECLASS

| | |
|---|---|
| ECLASS-13.0 | 27210120 |
| ECLASS-15.0 | 27210120 |

### ETIM

| | |
|---|---|
| ETIM 10.0 | EC002653 |

### UNSPSC

| | |
|---|---|
| UNSPSC 21.0 | 39121000 |

## Environmental product compliance

EU RoHS

| | |
|---|---|
| Fulfills EU RoHS substance requirements | Yes |
| Exemption | 7(c)-I |

China RoHS

| | |
|---|---|
| Environment friendly use period (EFUP) | EFUP-50 |
| | An article-related China RoHS declaration table can be found in the download area for the respective article under "Manufacturer declaration". For all articles with EFUP-E, no China RoHS declaration table issued and required. |

EU REACH SVHC

| | |
|---|---|
| REACH candidate substance (CAS No.) | No substance above 0.1 wt% |


Phoenix Contact 2026 © - all rights reserved
https://www.phoenixcontact.com



PHOENIX CONTACT Ltd
Halesfield 13, Telford
Shropshire, TF7 4PG
01952 681700
info@phoenixcontact.co.uk