IL PB BK DP/V1-PAC - Bus coupler

2862246

https://www.phoenixcontact.com/gb/products/2862246

Please be informed that the data shown in this PDF document is generated from our online catalog. Please find the complete data in the user documentation. Our general terms of use for downloads are valid.

CRA-READY



Inline, Bus coupler, PROFIBUS DP, D-SUB-9 female connector, transmission speed in the local bus: 500 kbps, degree of protection: IP20, including Inline connector and labeling field; The product is being prepared for compliance with the Cyber Resilience Act (CRA).

Product description

The bus coupler is intended for use within a PROFIBUS network and represents the link to the Inline I/O system. Up to 63 Inline devices can be connected to the bus coupler. The bus coupler supports a maximum of 16 PCP devices. A corresponding GSD file is available for integrating the Inline station into the programming system. This file can be downloaded via the product at www.phoenixcontact.com/products. The bus coupler does not support PROFIsafe modules. Use the IL PB BK DI8 DO4/EF-PAC bus coupler for this. This bus coupler does not support intrinsically safe Inline terminals or the corresponding power terminal and disconnect terminal block, i.e., all IB IL EX ... items. Use the IL PB BK DI8 DO4/EF-PAC bus coupler for this.

Your advantages

- INTERBUS connection via 9-pos. D-SUB socket
- PROFIBUS data transmission speed of 9.6 kbps to 12 Mbps
- Electrical isolation between PROFIBUS interface and logic
- DIP switch to set the PROFIBUS address
- Supported PROFIBUS addresses from 0 to 126
- DP/V1 for class 1 and class 2 masters



Commercial data

Item number	2862246
Packing unit	1 pc
Minimum order quantity	1 pc
Sales key	DRI112
Product key	DRI112
GTIN	4017918907471
Weight per piece (including packing)	266 g
Weight per piece (excluding packing)	240 g
Customs tariff number	85389091
Country of origin	DE

Technical data

Dimensions

Dimensional drawing	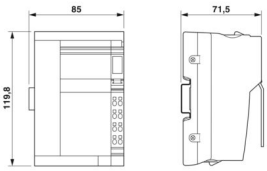
Width	85 mm
Height	119.8 mm
Depth	71.5 mm

Notes

Note on application	Only for industrial use
Note on application	As things stand now, we are preparing the product so that, as of December 11, 2027, it will comply with the requirements of the EU Cyber Resilience Act (CRA) based on the information currently available regarding the CRA.

Utilization restriction

CCCex note	Use in potentially explosive areas is not permitted in China.

Mounting

Mounting type	DIN rail mounting

Material specifications

Color (Housing)	green (RAL 6021)

Interfaces

PROFIBUS DP

Number of interfaces	1
Connection method	D-SUB-9 female connector
Number of positions	9
Transmission speed	9.6 kbps ... 12 Mbps

Inline local bus

Number of interfaces	1
Connection method	Inline data jumper
Transmission speed	500 kbps

Fieldbus: Local bus gateway

Max. number of local bus devices	63

System properties

System limits

Amount of process data (Input/output data)	max. 176 Byte (per station)
Number of supported devices	max. 63 (per station)
Number of local bus devices that can be connected	max. 63
Number of devices with parameter channel	max. 16
Number of supported branch terminals with remote bus branch	0

Programming data

Register length (master)	512 Byte

Product properties

Product type	I/O component
Product family	Inline
Type	modular
Scope of supply	including Inline connector and labeling field
Special properties	The product is being prepared for compliance with the Cyber Resilience Act (CRA)

Insulation characteristics

Overvoltage category	II (IEC 60664-1, EN 60664-1)
Pollution degree	2 (IEC 60664-1, EN 60664-1)

Electrical properties

Maximum power dissipation for nominal condition	3 W
Protective circuit	Protection against polarity reversal, surge protection (24-V supply U_{BK} and U_S)

Potentials: Bus coupler supply U_{BK}; Communications power U_L (7.5 V) and the analog supply U_{ANA} (24 V) are generated from the bus coupler supply.

Supply voltage	24 V DC (via Inline connector)
Supply voltage range	19.2 V DC ... 30 V DC (including all tolerances, including ripple)
Current draw	max. 1.25 A (with max. number of connected I/O terminal blocks)
	typ. 100 mA (without connected Inline I/O terminals)

Potentials: Communications power (U_L)

Supply voltage	7.5 V DC
Power supply	max. 2 A DC

Potentials: Supply of analog modules (U_{ANA})

Supply voltage	24 V DC
Supply voltage range	19.2 V DC ... 30 V DC (including all tolerances, including ripple)
Power supply	max. 0.5 A DC

Potentials: Main circuit supply (U_M)

Supply voltage	24 V DC
Supply voltage range	19.2 V DC ... 30 V DC (including all tolerances, including ripple)
Power supply	max. 8 A DC (sum of U_M + U_S)

Potentials: Segment circuit supply (U_S)

Supply voltage	24 V DC
Supply voltage range	19.2 V DC ... 30 V DC (including all tolerances, including ripple)
Power supply	max. 8 A DC (sum of U_M + U_S)

Electrical isolation/isolation of the voltage ranges

Test voltage: PROFIBUS/local bus and supply voltage U_{BK} and U_S	500 V
Test voltage: PROFIBUS / FE	500 V
Test voltage: PROFIBUS / FE D-SUB	500 V
Test voltage: Local bus and supply voltage U_{BK} and U_S / FE	500 V
Test voltage: Local bus and supply voltage U_{BK} and U_S / FE D-SUB	500 V
Test voltage: FE / FE D-SUB	500 V

Connection data

Connection technology

Connection name	Inline connector

Inline connector

Connection method	Spring-cage connection
Conductor cross-section, rigid	0.08 mm² ... 1.5 mm²
Conductor cross-section, flexible	0.08 mm² ... 1.5 mm²
Conductor cross-section AWG	28 ... 16
Stripping length	8 mm

Environmental and real-life conditions

Ambient conditions

Ambient temperature (operation)	0 °C ... 55 °C
Degree of protection	IP20
Air pressure (operation)	70 kPa ... 106 kPa (up to 3000 m above sea level)
Air pressure (storage/transport)	70 kPa ... 106 kPa (up to 3000 m above sea level)
Ambient temperature (storage/transport)	-25 °C ... 85 °C
Permissible humidity (operation)	10 % ... 95 % (non-condensing)
Permissible humidity (storage/transport)	10 % ... 95 % (non-condensing)

Mechanical test

Vibration resistance in accordance with EN 60068-2-6/IEC 60068-2-6	5g
Shock in accordance with EN 60068-2-27/IEC 60068-2-27	25g

Standards and regulations

Protection class	III (IEC 61140, EN 61140, VDE 0140-1)

Drawings

Dimensional drawing

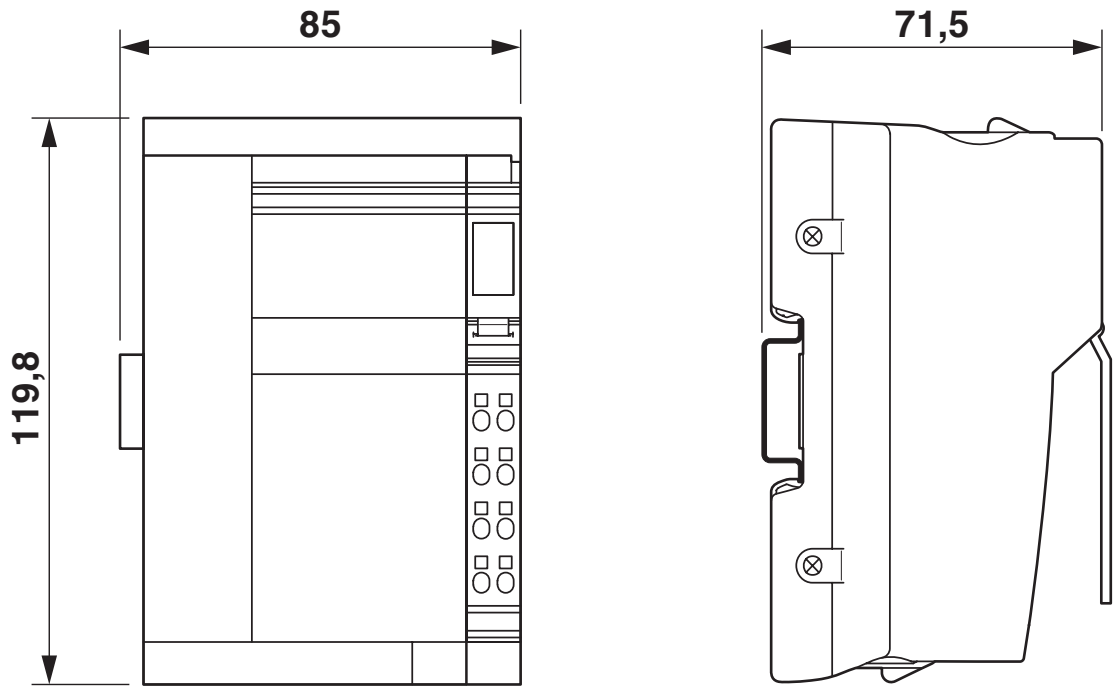

Dimensional drawing

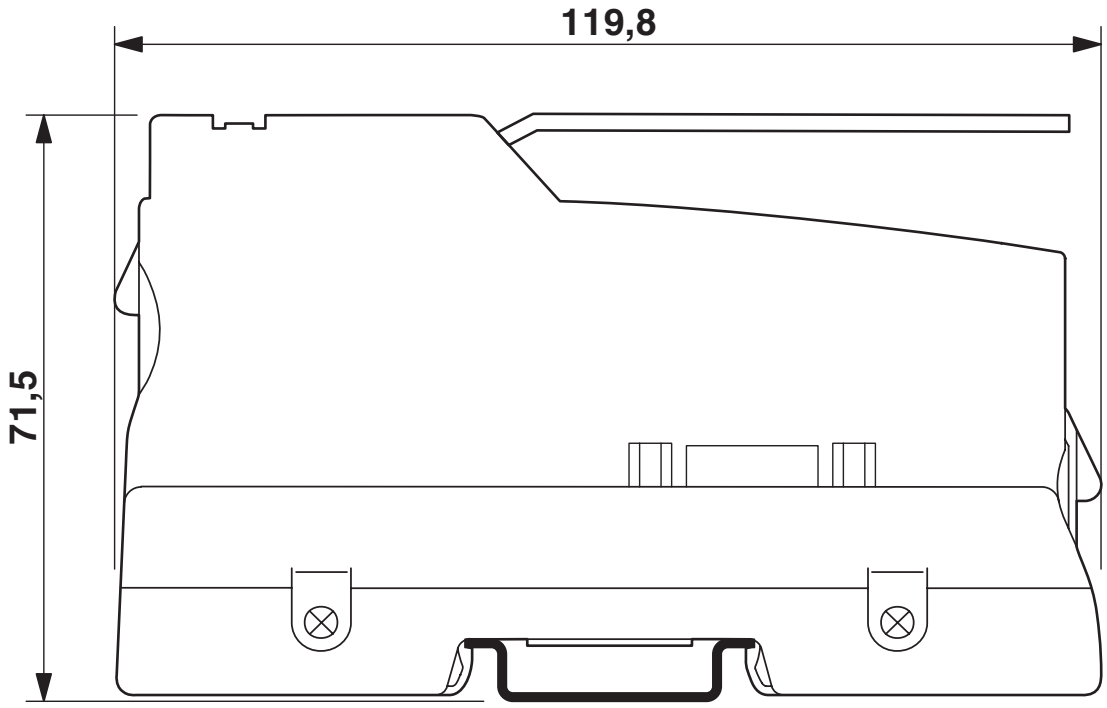

Connection diagram

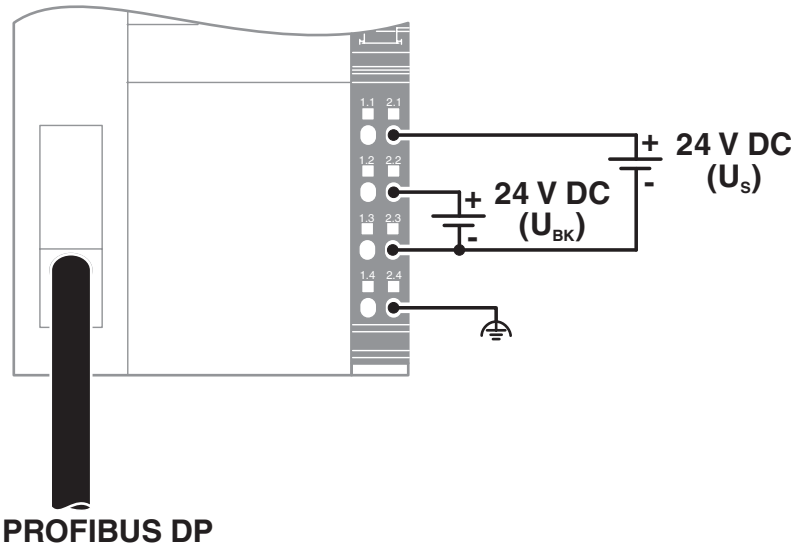

Block diagram

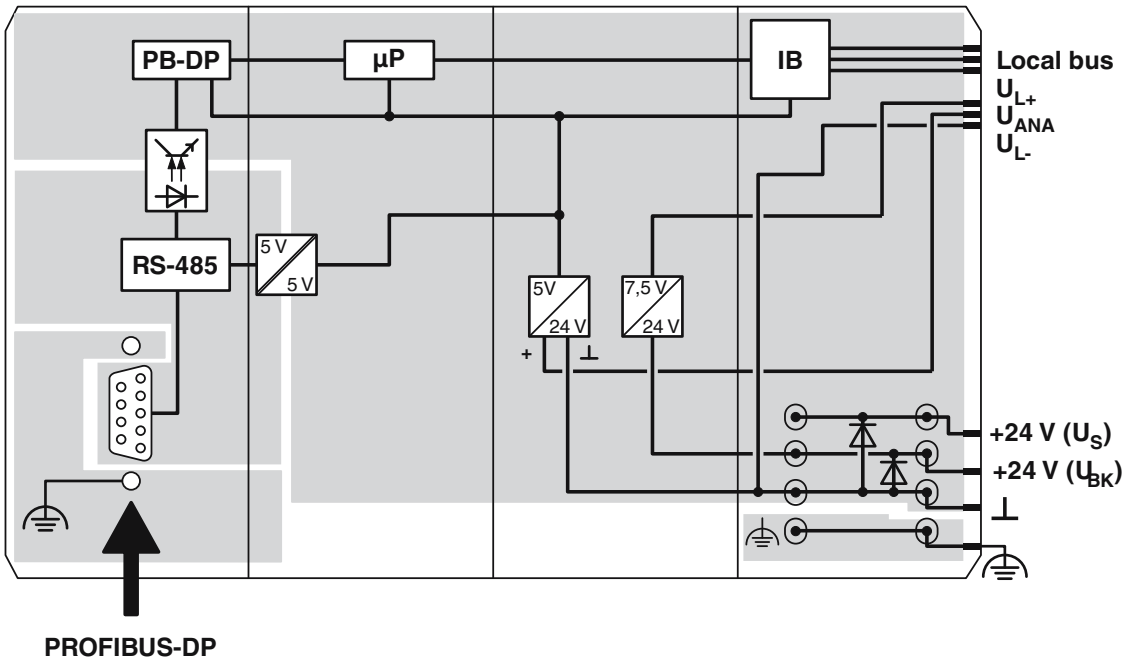

Approvals

To download certificates, visit the product detail page: https://www.phoenixcontact.com/gb/products/2862246

EAC
Approval ID: TR_TS_D_00850-20

UL Listed
Approval ID: E140324

cUL Listed
Approval ID: E140324

cUL Listed
Approval ID: E199827

UL Listed
Approval ID: E199827

Classifications

ECLASS

ECLASS-13.0	27242608
ECLASS-15.0	27242608

ETIM

ETIM 10.0	EC001604

UNSPSC

UNSPSC 21.0	32151600

Environmental product compliance

EU RoHS

Fulfills EU RoHS substance requirements	Yes
Exemption	6(c), 7(a), 7(c)-I

China RoHS

Environment friendly use period (EFUP)	EFUP-50
	An article-related China RoHS declaration table can be found in the download area for the respective article under "Manufacturer declaration". For all articles with EFUP-E, no China RoHS declaration table issued and required.

EU REACH SVHC

REACH candidate substance (CAS No.)	Lead(CAS: 7439-92-1)
SCIP	7fa1d4a7-2732-4590-b73f-9de616d4d189

Phoenix Contact 2026 © - all rights reserved
https://www.phoenixcontact.com

PHOENIX CONTACT Ltd
Halesfield 13, Telford
Shropshire, TF7 4PG
01952 681700
info@phoenixcontact.co.uk