# PT 2-F-ST - Surge protection plug

2859000

https://www.phoenixcontact.com/gb/products/2859000

Please be informed that the data shown in this PDF document is generated from our online catalog. Please find the complete data in the user documentation. Our general terms of use for downloads are valid.






Surge protection plug for the base element, surge voltage coarse protection for two signal lines grounded on one side.

## Your advantages

- Easy testing and documentation with CHECKMASTER 2 with pluggable protective modules
- Maximum ease of maintenance, thanks to the 2-piece design
- Easy selection for all possible demands in MCR applications with a complete product portfolio
- The signal is not influenced during maintenance work, thanks to the impedance-neutral insertion and removal of protective plugs

## Commercial data

| | |
|---|---|
| Item number | 2859000 |
| Packing unit | 10 pc |
| Minimum order quantity | 1 pc |
| Sales key | CL2111 |
| Product key | CL2111 |
| GTIN | 4017918902452 |
| Weight per piece (including packing) | 19.79 g |
| Weight per piece (excluding packing) | 16.12 g |
| Customs tariff number | 85363010 |
| Country of origin | DE |

## Technical data

### Product properties

| | |
|---|---|
| Product type | Surge protection for MCR technology |
| Product family | PLUGTRAB PT |
| IEC test classification | C1 |
| | C2 |
| | C3 |
| | D1 |
| Type | Male |
| Surge protection fault message | none |
| Arrester can be tested with CHECKMASTER from software version: | From SW rev. 1.10 |

Insulation characteristics

| | |
|---|---|
| Overvoltage category | III |
| Pollution degree | 2 |

### Electrical properties

| | |
|---|---|
| Nominal voltage $U_N$ | 48 V AC |

### Connection data

| | |
|---|---|
| Connection method | Screw connection (in connection with the base element) |
| Screw thread | M3 |
| Tightening torque | 0.5 Nm |
| Conductor cross-section flexible | 0.2 mm² ... 2.5 mm² |
| Conductor cross-section rigid | 0.2 mm² ... 4 mm² |
| Conductor cross-section AWG | 24 ... 12 |

### Dimensions

| | |
|---|---|
| Dimensional drawing | 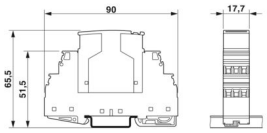  |
| Width | 17.7 mm |
| Height | 45 mm |
| Depth | 52 mm |
| Horizontal pitch | 1 HP |
| Complete module width | 17.7 mm |
| Complete module height | 90 mm |
| Complete module depth | 65.5 mm |

### Material specifications

| | |
|---|---|
| Color | black (RAL 9005) |
| Flammability rating according to UL 94 | V-0 |
| Housing material | PA 6.6 |

## Mechanical properties

Mechanical data

| | |
|---|---|
| Open side panel | No |

## Protective circuit

| | |
|---|---|
| Direction of action | Line-Earth Ground |
| Nominal voltage $U_N$ | 48 V AC |
| Maximum continuous operating voltage $U_C$ | 60 V DC |
| | 48 V AC |
| Rated current | 2 A AC (80 °C) |
| | 150 mA DC (80 °C) |
| Operating effective current $I_C$ at $U_C$ | ≤ 2 µA |
| Protective conductor current $I_{PE}$ | ≤ 4 µA |
| Nominal discharge current $I_n$ (8/20) µs (line-ground) | 20 kA |
| Pulse discharge current $I_{imp}$ (10/350) µs (line-earth) | 5 kA |
| Total discharge current $I_{Total}$ (8/20) µs | 20 kA |
| Output voltage limitation at 1 kV/µs (line-earth) spike | ≤ 600 V |
| Output voltage limitation at 1 kV/µs (line-earth) static | ≤ 25 V |
| Voltage protection level $U_p$ (line-earth) | ≤ 600 V (C2 - 10 kV / 5 kA) |
| Voltage protection level $U_p$ static (line-earth) | ≤ 25 V (C2 - 10 kV / 5 kA) |
| Response time $t_A$ (line-earth) | ≤ 100 ns |
| Input attenuation aE, asym. | typ. 0.1 dB (≤ 1 MHz / 50 Ω) |
| Cut-off frequency fg (3 dB), asym. (siganl ground) in 50 Ω system | typ. 100 MHz |
| Capacity (Core-Earth) | typ. 2 pF |
| Resistance per path | 0 Ω |
| Surge protection fault message | none |
| Max. required back-up fuse | 2 A AC (T) |
| | 150 mA DC (T) |
| Impulse durability (line-earth) | C2 - 10 kV / 5 kA |
| | C1 - 1 kV / 500 A |
| | C3 - 100 A |
| | D1 - 2.5 kA |

## Environmental and real-life conditions

Ambient conditions

| | |
|---|---|
| Degree of protection | IP20 |
| Ambient temperature (operation) | -40 °C ... 85 °C |
| Ambient temperature (storage/transport) | -40 °C ... 85 °C |
| Altitude | ≤ 2000 m (amsl) |

## Standards and regulations

| | |
|---|---|
| Standards/specifications | IEC 61643-21 |
| Note | 2000 + corrigendum 2001 + A1:2008, modified + A2:2012 |
| Standards/specifications | EN 61643-21 |
| Note | 2001 + A1:2009 + A2:2013 |

## Mounting

| | |
|---|---|
| Mounting type | on base element |

## Drawings

Dimensional drawing

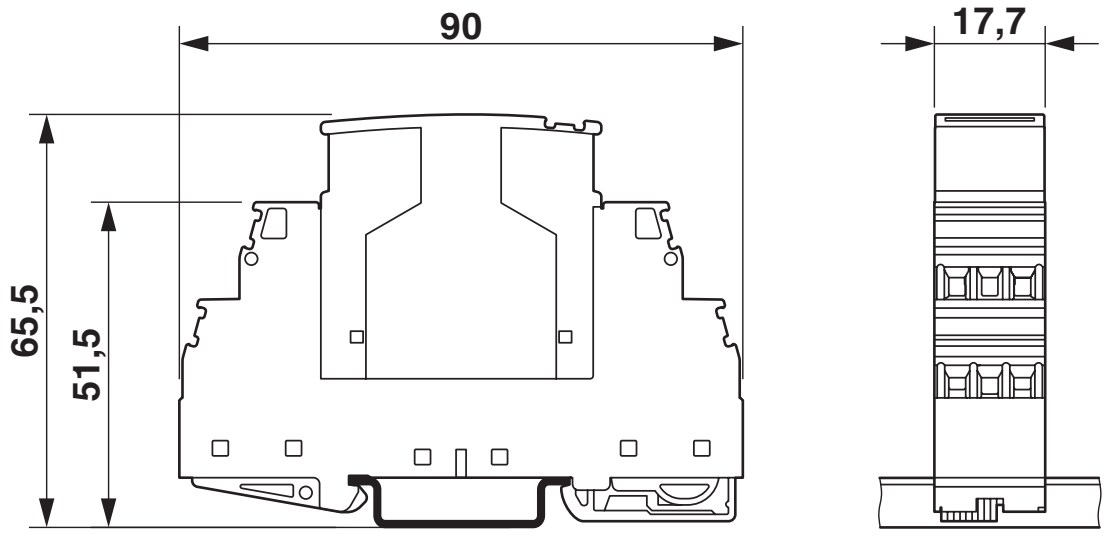


The figure shows the complete module consisting of a base element and connector

Circuit diagram

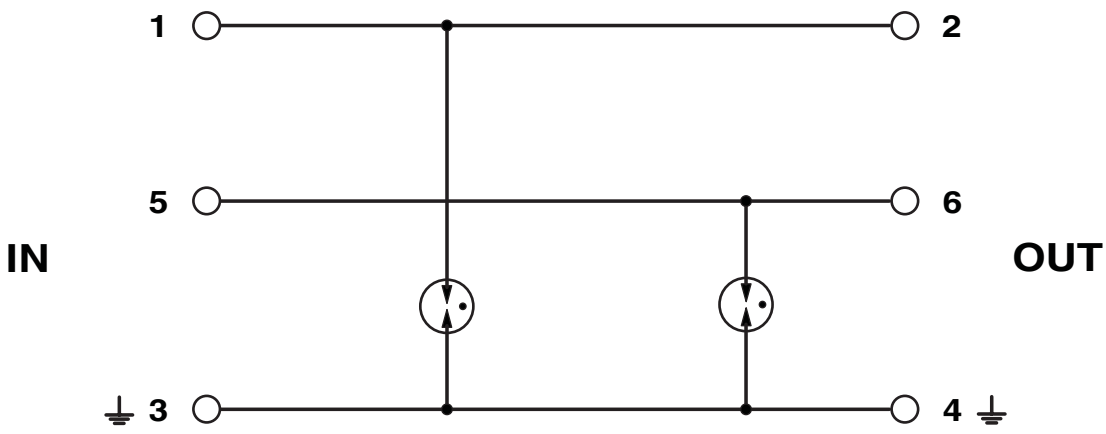

## Classifications

### ECLASS

| | |
|---|---|
| ECLASS-13.0 | 27171501 |

### ETIM

| | |
|---|---|
| ETIM 9.0 | EC000943 |

### UNSPSC

| | |
|---|---|
| UNSPSC 21.0 | 39121600 |

## Environmental product compliance

EU RoHS

| | |
|---|---|
| Fulfills EU RoHS substance requirements | Yes, No exemptions |

China RoHS

| | |
|---|---|
| Environment friendly use period (EFUP) | EFUP-E |
| | No hazardous substances above the limits |

EU REACH SVHC

| | |
|---|---|
| REACH candidate substance (CAS No.) | No substance above 0.1 wt% |

EF3.1 Climate Change

| | |
|---|---|
| CO2e kg | 0.241 kg CO2e |


Phoenix Contact 2026 © - all rights reserved
https://www.phoenixcontact.com



PHOENIX CONTACT Ltd
Halesfield 13, Telford
Shropshire, TF7 4PG
01952 681700
info@phoenixcontact.co.uk