# D-LAN-CAT.5E - Surge protection device

2858991

https://www.phoenixcontact.com/gb/products/2858991

Please be informed that the data shown in this PDF document is generated from our online catalog. Please find the complete data in the user documentation. Our general terms of use for downloads are valid.



Fine surge protection in accordance with Class D (CAT.5e), for token ring and Ethernet. RJ45 attachment plug with separate grounding cable, incl. RJ45 cable

## Commercial data

| | |
|---|---|
| Item number | 2858991 |
| Packing unit | 1 pc |
| Minimum order quantity | 1 pc |
| Sales key | CL3111 |
| Product key | CL3111 |
| GTIN | 4017918920463 |
| Weight per piece (including packing) | 135.8 g |
| Weight per piece (excluding packing) | 135 g |
| Customs tariff number | 85363010 |
| Country of origin | DE |

## Technical data

### Product properties

| | |
|---|---|
| Product type | Surge protection for information technology |
| Product family | DATATRAB |
| IEC test classification | C1 |
| | C2 |
| | C3 |
| | B2 |
| | B3 |
| VDE requirement class | C1 |
| | C2 |
| | C3 |
| | B2 |
| | B3 |
| Type | Intermediate plug |
| Surge protection fault message | none |

Insulation characteristics

| | |
|---|---|
| Overvoltage category | II |
| Pollution degree | 2 |

### Connection data

| | |
|---|---|
| Connection method | RJ45 |

### Dimensions

| | |
|---|---|
| Dimensional drawing | 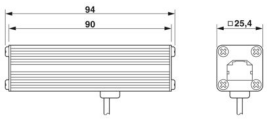  |
| Width | 25.4 mm |
| Height | 94 mm |
| Depth | 25.4 mm |

### Material specifications

| | |
|---|---|
| Color | black (RAL 9005) |
| Housing material | Aluminum, anodized |

### Mechanical properties

Mechanical data

| | |
|---|---|
| Open side panel | No |

### Protective circuit

| | |
|---|---|
| Direction of action | Line-Line & Line-Shield & Shield-Earth Ground |
| Maximum continuous operating voltage $U_C$ | ± 7 V DC |
| Rated current | 1.5 A (25 °C) |
| Operating effective current $I_C$ at $U_C$ | ≤ 100 µA |
| Protective conductor current $I_{PE}$ | ≤ 100 µA |
| Nominal discharge current $I_n$ (8/20) µs (line-line) | 350 A |
| Nominal discharge current $I_n$ (8/20) µs (line-ground) | 2.5 kA |
| Max. discharge current $I_{max}$ (8/20) µs maximum (line-earth) | 2.5 kA (in total) |
| Nominal pulse current Ian (10/700) µs (line-line) | 160 A |
| Nominal pulse current Ian (10/700) µs (line-earth) | 160 A |
| Output voltage limitation at 1 kV/µs (line-line) spike | ≤ 22 V |
| Output voltage limitation at 1 kV/µs (line-earth) spike | ≤ 80 V (equipotential bonding lead: 1 m) |
| Output voltage limitation at 1 kV/µs (shield-ground) spike | ≤ 700 V (equipotential bonding lead: 1 m) |
| Residual voltage at $I_n$ (conductor-conductor) | ≤ 45 V |
| Residual voltage at $I_n$ (conductor-ground) | ≤ 45 V |
| Residual voltage at $I_n$ (shield-ground) | ≤ 700 V |
| Voltage protection level $U_p$ (line-line) | ≤ 50 V (C1 - 500 V / 250 A) |
| | ≤ 20 V (B3 - 2 kV / 25 A) |
| Voltage protection level $U_p$ (line-earth) | ≤ 65 V (C1, 500 V/250 A - PA-Ltg: 1 m) |
| | ≤ 25 V (B3 - 2 kV / 25 A - PA-Ltg: 1 m) |
| | ≤ 60 V (C3, 7 kV/90 A - PA-Ltg: 1 m) |
| Voltage protection level $U_p$ (shield-ground) | ≤ 850 V (C2 - 4 kV/2 kA - PA-Ltg: 1 m) |
| Response time $t_A$ (line-line) | ≤ 500 ns |
| Response time $t_A$ (line-earth) | ≤ 100 ns |
| Input attenuation aE, sym. | 1 dB (up to 100 MHz, 100 Ω system) |
| Near-end crosstalk attenuation | 36 dB (pair 3-6 against pair 4-5 in 100 Ω system / 100 MHz) |
| | 40 dB (all other pair combinations in 100 Ω system/100 MHz) |
| Cut-off frequency fg (3 dB), sym. in 100 Ω system | ≤ 100 MHz |
| Capacity (Core-Core) | 20 pF (typical) |
| Capacity (Core-Earth) | 1 pF (typical) |
| Surge protection fault message | none |
| Impulse durability (line-line) | B2 - 4 kV / 100 A |
| | B3 - 2 kV / 25 A |
| | C1 - 500 V / 250 A |
| Impulse durability (line-earth) | B2 - 4 kV / 100 A |
| | C1 - 500 V / 250 A |
| | C2 - 4 kV / 2 kA |
| | B3 - 2 kV / 25 A |

## Environmental and real-life conditions

### Ambient conditions

| | |
|---|---|
| Degree of protection | IP20 |
| Ambient temperature (operation) | -40 °C ... 80 °C |

## Standards and regulations

| | |
|---|---|
| VDE requirement class | C1 |
| | C2 |
| | C3 |
| | B2 |
| | B3 |

Standards Information technology specification

| | |
|---|---|
| Standards/regulations | IEC 61643-21 |
| | E VDE 0845-3-1 |
| | DIN EN 50173-1 |
| | IEC 61643-21 |
| | E VDE 0845-3-1 |
| | DIN EN 50173-1 |

Air clearances and creepage distances

| | |
|---|---|
| Standards/regulations | DIN VDE 0110-1 / IEC 60664-1 |

## Mounting

| | |
|---|---|
| Mounting type | Connection-specific intermediate plugging |

## Drawings

Dimensional drawing

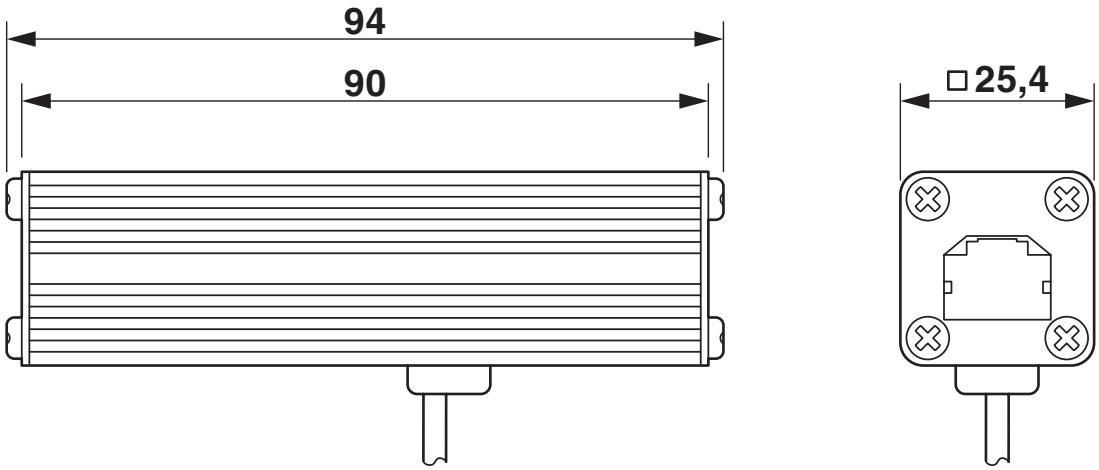


Circuit diagram

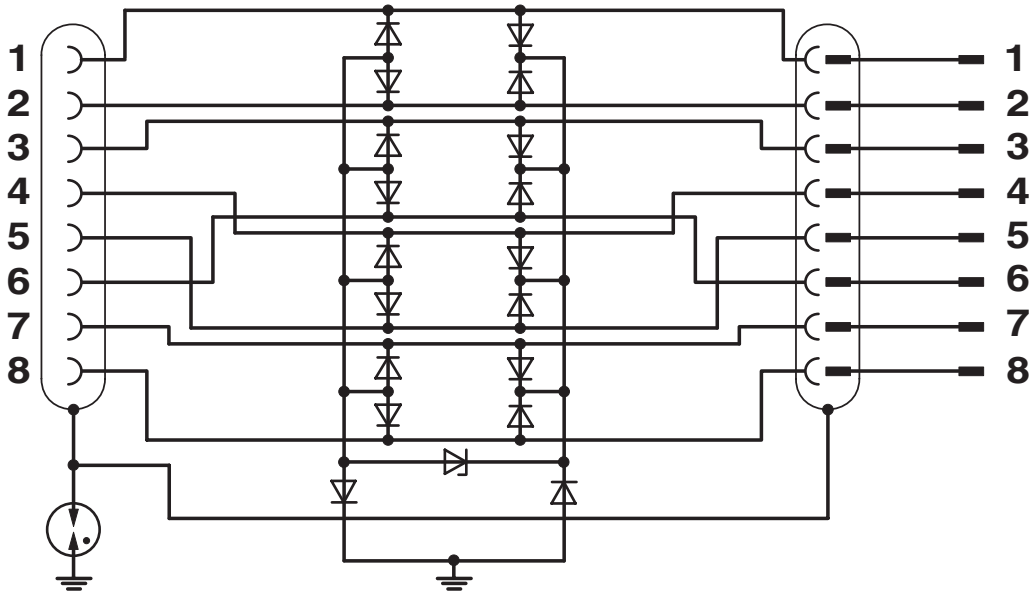

## Approvals

To download certificates, visit the product detail page: https://www.phoenixcontact.com/gb/products/2858991

**UL Listed**
Approval ID: FILE E 138168

## Classifications

### ECLASS

| | |
|---|---|
| ECLASS-13.0 | 27171503 |
| ECLASS-15.0 | 27171503 |

### ETIM

| | |
|---|---|
| ETIM 10.0 | EC001466 |

### UNSPSC

| | |
|---|---|
| UNSPSC 21.0 | 39121600 |

## Environmental product compliance

EU RoHS

| | |
|---|---|
| Fulfills EU RoHS substance requirements | Yes |
| Exemption | 7(a), 7(c)-I |

China RoHS

| | |
|---|---|
| Environment friendly use period (EFUP) | EFUP-50 |
| | An article-related China RoHS declaration table can be found in the download area for the respective article under "Manufacturer declaration". For all articles with EFUP-E, no China RoHS declaration table issued and required. |

EU REACH SVHC

| | |
|---|---|
| REACH candidate substance (CAS No.) | Lead(CAS: 7439-92-1) |
| SCIP | 5560daf8-02ad-477f-8264-22d6d2558977 |


Phoenix Contact 2026 © - all rights reserved
https://www.phoenixcontact.com



PHOENIX CONTACT Ltd
Halesfield 13, Telford
Shropshire, TF7 4PG
01952 681700
info@phoenixcontact.co.uk