PT 3-PB-ST - Surge protection plug

2858030

https://www.phoenixcontact.com/gb/products/2858030

Please be informed that the data shown in this PDF document is generated from our online catalog. Please find the complete data in the user documentation. Our general terms of use for downloads are valid.

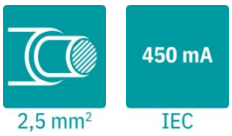



Surge protection plug for the base element, normal mode voltage coarse and fine protection for two floating signal wires in IT, common mode voltage coarse protection to ground.

Your advantages

- Easy testing and documentation with CHECKMASTER 2 with pluggable protective modules
- Maximum ease of maintenance, thanks to the 2-piece design
- Easy selection for all possible demands in MCR applications with a complete product portfolio
- The signal is not influenced during maintenance work, thanks to the impedance-neutral insertion and removal of protective plugs

ELEKTROGERÄTE RÜCKNAHME

Commercial data

Item number	2858030
Packing unit	10 pc
Minimum order quantity	10 pc
Sales key	CL3121
Product key	CL3121
GTIN	4017918878030
Weight per piece (including packing)	28.8 g

Weight per piece (excluding packing)	20.53 g
Customs tariff number	85363090
Country of origin	DE

Technical data

Product properties

Product type	Surge protection for information technology
Product family	PLUGTRAB PT
IEC test classification	C1
	C2
	C3
	D1
VDE requirement class	C1
	C2
	C3
	D1
Type	Male
Number of positions	2
Arrester can be tested with CHECKMASTER from software version:	From SW rev. 1.10
Wire pairs per module	3

Insulation characteristics

Overvoltage category	III
Pollution degree	2

Electrical properties

Nominal voltage U_N	5 V DC

Connection data

Connection method	Screw connection (in connection with the base element)
Screw thread	M3
Tightening torque	0.8 Nm
Conductor cross-section flexible	0.2 mm² ... 2.5 mm²
Conductor cross-section rigid	0.2 mm² ... 4 mm²
Conductor cross-section AWG	24 ... 12

Dimensions

Dimensional drawing	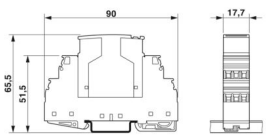
Width	17.7 mm
Height	45 mm
Depth	52 mm
Horizontal pitch	1 HP

Complete module width	17.7 mm
Complete module height	90 mm
Complete module depth	65.5 mm

Material specifications

Color	black (RAL 9005)
Flammability rating according to UL 94	V-0
Housing material	PA

Mechanical properties

Mechanical data

Open side panel	No

Protective circuit

Direction of action	Line-Line & Line-Signal Ground/Shield & optional Signal Ground/Shield-Earth Ground
Nominal voltage U_N	5 V DC
Maximum continuous operating voltage U_C	5.2 V DC
	3.6 V AC
Rated current	450 mA (45 °C)
Operating effective current I_C at U_C	≤ 300 µA
Protective conductor current I_{PE}	≤ 300 µA (with PT 1X2-BE)
	≤ 1 µA (with PT 1X2+F-BE)
Nominal discharge current I_n (8/20) µs (line-ground)	10 kA
Pulse discharge current I_{imp} (10/350) µs	2.5 kA
Total discharge current I_{Total} (8/20) µs	20 kA
Max. discharge current I_{max} (8/20) µs maximum (line-line)	10 kA
Max. discharge current I_{max} (8/20) µs maximum (line-earth)	10 kA
Nominal pulse current Ian (10/1000) µs (line-line)	90 A
Output voltage limitation at 1 kV/µs (line-line) spike	≤ 55 V
Output voltage limitation at 1 kV/µs (line-earth) spike	≤ 55 V (with PT 1X2-BE)
	≤ 700 V (with PT 1X2+F-BE)
Output voltage limitation at 1 kV/µs (line-line) static	≤ 15 V
Output voltage limitation at 1 kV/µs (line-earth) static	≤ 15 V
	≤ 30 V (with PT 1X2+F-BE)
Residual voltage at I_n (conductor-conductor)	≤ 15 V
Residual voltage at I_n (conductor-ground)	≤ 30 V (with PT 1X2-BE)
Residual voltage at I_n (line-signal ground)	≤ 15 V (with PT 1X2-BE)
Residual voltage with Ian (10/1000) µs (line-line)	≤ 15 V
Residual voltage with Ian (10/1000) µs (line-signal ground)	≤ 15 V
Voltage protection level U_p (line-line)	≤ 70 V (C1 - 1 kV / 500 A)
	≤ 45 V (C3 - 25 A)
	≤ 100 V (C2 - 10 kV / 5 kA)
	≤ 70 V (6 kV / 3 kA)

Voltage protection level U_p (line-earth)	≤ 80 V (C1 - 1 kV / 500 A)
	≤ 110 V (C2 - 10 kV / 5 kA)
	≤ 100 V (6 kV / 3 kA)
	≤ 45 V (C3 - 25 A)
Voltage protection level U_p (line-signal ground)	≤ 45 V (C3 - 25 A)
Response time t_A (line-line)	≤ 500 ns
Response time t_A (line-earth)	≤ 500 ns
Response time t_A (line-signal ground)	≤ 500 ns
Input attenuation aE, sym.	typ. 0.3 dB (≤ 5 MHz / 100 Ω)
Cut-off frequency fg (3 dB), sym. in 100 Ω system	typ. 60 MHz
Capacity (Core-Core)	typ. 30 pF
Resistance per path	2.2 Ω ±10 % (7-8/11-12)
Surge protection fault message	none
Max. required back-up fuse	500 mA (T)
Impulse durability (line-line)	C2 - 10 kV / 5 kA
	C3 - 90 A
Impulse durability (line-earth)	C2 - 10 kV / 5 kA
	C3 - 90 A
	D1 - 2.5 kA

Environmental and real-life conditions

Ambient conditions

Degree of protection	IP20
Ambient temperature (operation)	-40 °C ... 85 °C
Altitude	max. 2000 m

Standards and regulations

VDE requirement class	C1
	C2
	C3
	D1

Air clearances and creepage distances

Standards/regulations	DIN EN 61664-1 / IEC 60664-1
Standards/specifications	EN 61643-21/A1
Note	2009
Standards/specifications	IEC 61643-21/A1
Note	2008

Mounting

Mounting type	on base element

Drawings

Dimensional drawing

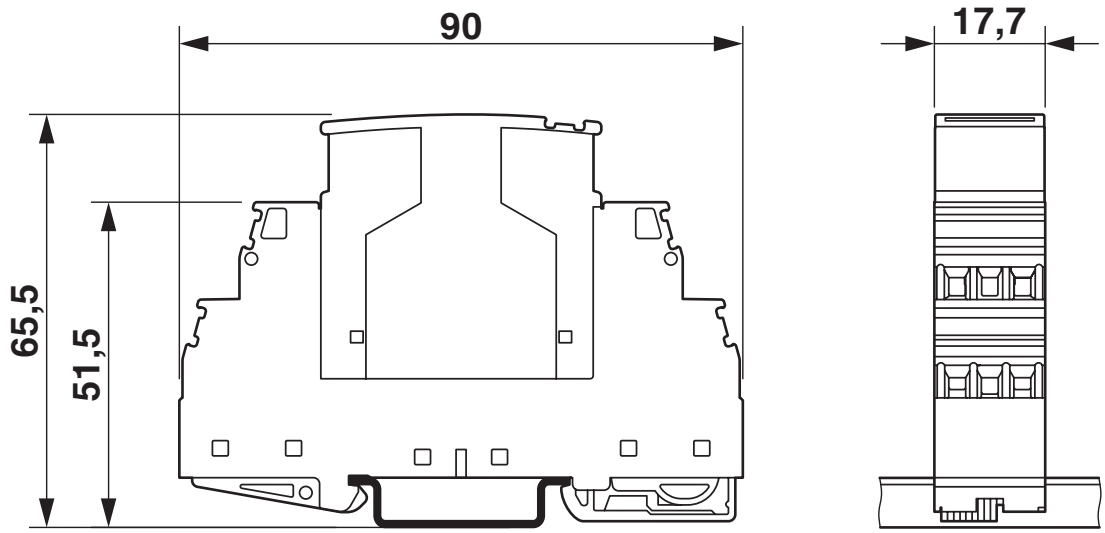

The figure shows the complete module consisting of a base element and connector

Circuit diagram

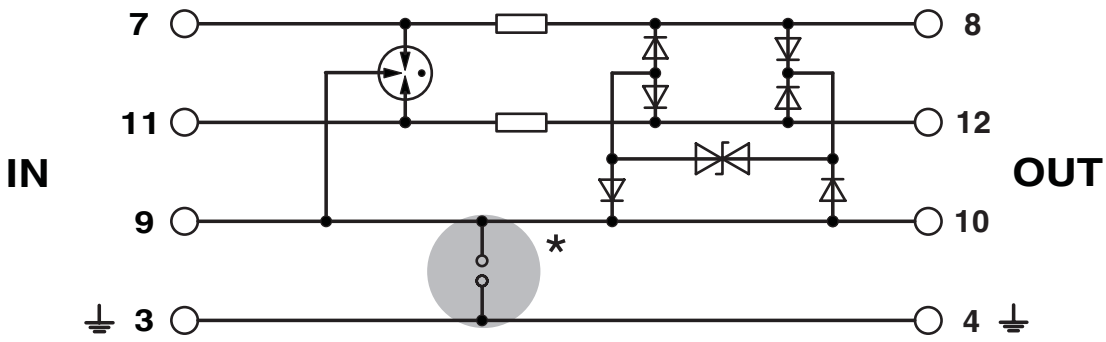

Approvals

To download certificates, visit the product detail page: https://www.phoenixcontact.com/gb/products/2858030

DNV GL
Approval ID: TAE00001N6

UL Listed
Approval ID: FILE E 138168

Classifications

ECLASS

ECLASS-13.0	27171503
ECLASS-15.0	27171503

ETIM

ETIM 10.0	EC001466

UNSPSC

UNSPSC 21.0	39121600

Environmental product compliance

EU RoHS

Fulfills EU RoHS substance requirements	Yes
Exemption	7(a), 7(c)-I

China RoHS

Environment friendly use period (EFUP)	EFUP-50
	An article-related China RoHS declaration table can be found in the download area for the respective article under "Manufacturer declaration". For all articles with EFUP-E, no China RoHS declaration table issued and required.

EU REACH SVHC

REACH candidate substance (CAS No.)	Lead(CAS: 7439-92-1)
SCIP	7cb99cb1-c917-4b56-9222-921e264f4a80

Phoenix Contact 2026 © - all rights reserved
https://www.phoenixcontact.com

PHOENIX CONTACT Ltd
Halesfield 13, Telford
Shropshire, TF7 4PG
01952 681700
info@phoenixcontact.co.uk