PT 2-PE/S-120AC/FM - Type 3 surge protection device

2856812

https://www.phoenixcontact.com/gb/products/2856812

Please be informed that the data shown in this PDF document is generated from our online catalog. Please find the complete data in the user documentation. Our general terms of use for downloads are valid.



The figure shows the PT 2-PE/S-230AC/FM version

Pluggable type 3 arrester (device protection) for single-phase power supply networks with separate N and PE (3-conductor system: L1, N, PE) with remote indication contact.

Commercial data

Item number	2856812
Packing unit	1 pc
Minimum order quantity	1 pc
Product key	CL1411
GTIN	4017918952952
Weight per piece (including packing)	80.7 g
Weight per piece (excluding packing)	80.4 g
Country of origin	DE

Technical data

Product properties

Product type	Device protection
Product family	PLUGTRAB PT
Type	DIN rail module, two-section, divisible
Surge protection fault message	Optical, remote indicator contact

Insulation characteristics

Overvoltage category	III
Pollution degree	2
Arrester can be tested with CHECKMASTER from software version:	From SW rev. 1.00
IEC test classification	III
EN type	T3

Electrical properties

Indicator/remote signaling

Connection name	Remote fault indicator contact
Switching function	N/C contact
Maximum operating voltage $U_{max.}$ AC	250 V
Maximum operating voltage U_{max} DC	50 V
Max. operating current I_{max}	3 A AC

Connection data

Connection method	Screw connection
Screw thread	M3
Tightening torque, min	0.8 Nm
Conductor cross-section flexible min.	0.2 mm²
Conductor cross-section flexible max.	2.5 mm²
Conductor cross-section, rigid min.	0.2 mm²
Conductor cross-section, rigid max.	4 mm²

Dimensions

Dimensional drawing	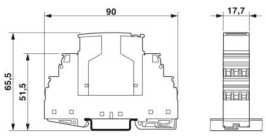
Width	17.7 mm
Height	90 mm
Depth	65.5 mm
Horizontal pitch	1 HP
Complete module width	17.7 mm

Complete module height	90 mm
Complete module depth	65.5 mm

Material specifications

Flammability rating according to UL 94	V0
Housing material	PA

Protective circuit

Direction of action	1L-N & N-PE
Nominal frequency f_N	50 Hz
	60 Hz
Maximum continuous operating voltage U_C	150 V AC
Nominal current I_N	26 A (30 °C)
Rated load current I_L	26 A (30 °C)
Protective conductor current I_{PE}	≤ 1.5 µA
Standby power consumption P_C	≤ 200 mVA
Operating effective current I_C at U_C	≤ 1.1 mA
Nominal discharge current I_n (8/20) µs	2.5 kA
	3 kA (in acc. with UL 1449)
Voltage protection level U_p (L-N)	≤ 620 V
Voltage protection level U_p (L-PE)	≤ 850 V
Voltage protection level U_p (N-PE)	≤ 850 V
Response time t_A (L-N)	≤ 25 ns
Response time t_A (L-PE)	≤ 100 ns
Max. required back-up fuse	25 A (gL/C)

Environmental and real-life conditions

Ambient conditions

Degree of protection	IP20
Ambient temperature (operation)	-40 °C ... 85 °C

Standards and regulations

Standards

Standards/regulations	IEC 61643-1
	EN 61643-11/A11
	NF C61-740
	IEC 61643-1
	EN 61643-11/A11
	UL 1449
	NF C61-740

Air clearances and creepage distances

Standards/regulations	DIN VDE 0110-1 / IEC 60664-1 / DIN VDE 0675-6 / IEC 61643-1
Standards/specifications	IEC 61643-1

Note	2005
Standards/specifications	EN 61643-11/A11
Note	2007
Standards/specifications	UL 1449
Standards/specifications	NF C61-740

Mounting

Mounting type	DIN rail: 35 mm

Drawings

Dimensional drawing

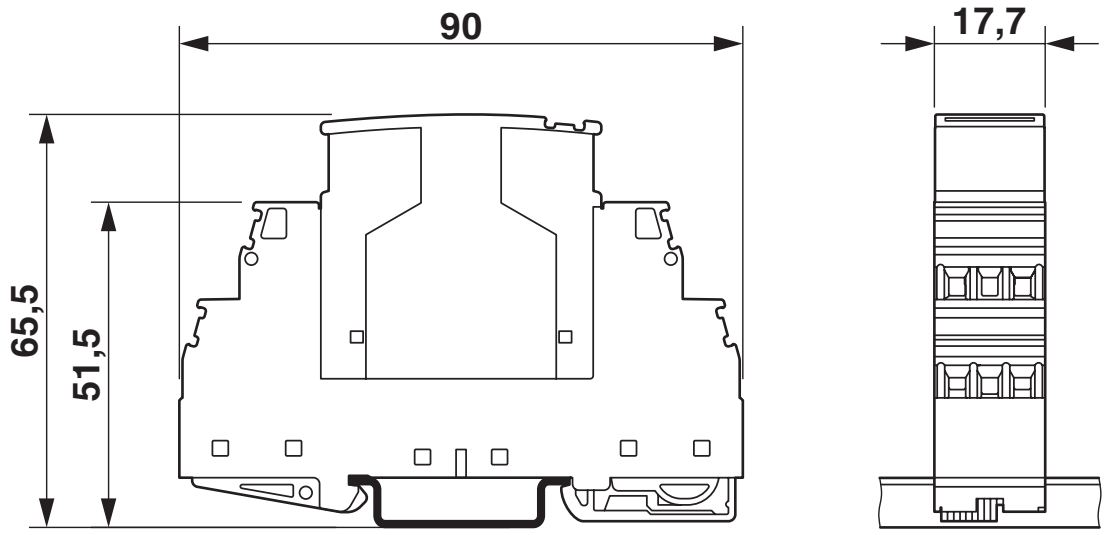

Circuit diagram

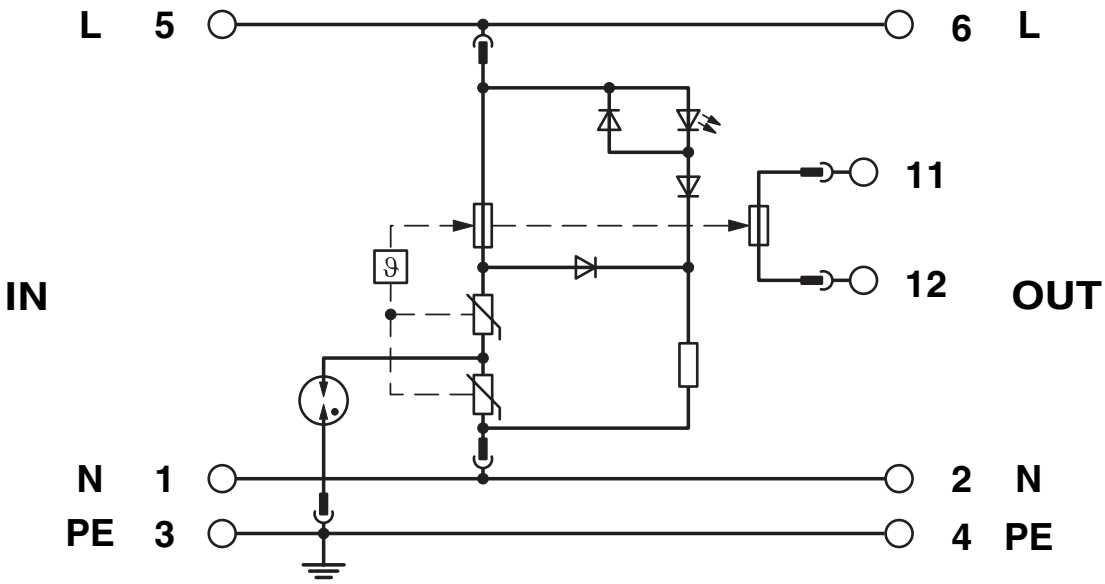

Environmental product compliance

EU RoHS

Fulfills EU RoHS substance requirements	Yes
Exemption	7(a)

EU REACH SVHC

REACH candidate substance (CAS No.)	Lead(CAS: 7439-92-1)

Phoenix Contact 2026 © - all rights reserved
https://www.phoenixcontact.com

PHOENIX CONTACT Ltd
Halesfield 13, Telford
Shropshire, TF7 4PG
01952 681700
info@phoenixcontact.co.uk