PT 2X1-24AC-ST - Surge protection plug

2856100

https://www.phoenixcontact.com/gb/products/2856100

Please be informed that the data shown in this PDF document is generated from our online catalog. Please find the complete data in the user documentation. Our general terms of use for downloads are valid.

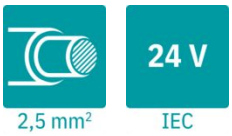



Surge protection plug for the base element, coarse and fine protection for two signal wires with common reference potential, common mode voltage coarse protection to ground. Design: 24 V AC

Your advantages

- Easy testing and documentation with CHECKMASTER 2 with pluggable protective modules
- Maximum ease of maintenance, thanks to the 2-piece design
- Easy selection for all possible demands in MCR applications with a complete product portfolio
- The signal is not influenced during maintenance work, thanks to the impedance-neutral insertion and removal of protective plugs

Commercial data

Item number	2856100
Packing unit	10 pc
Minimum order quantity	1 pc
Note	Made to order (non-returnable)
Sales key	CL2111
Product key	CL2111
GTIN	4017918599140
Weight per piece (including packing)	21.5 g
Weight per piece (excluding packing)	19.85 g
Customs tariff number	85363010
Country of origin	DE

Technical data

Notes

General

Note	Technical data is valid in association with the following specified base elements:
	PT 2X1+F-BE 2856142
	PT 2X1-BE 2856139

Product properties

Product type	Surge protection for MCR technology
Product family	PLUGTRAB PT
IEC test classification	C1
	C2
	C3
	D1
Type	Male
Arrester can be tested with CHECKMASTER from software version:	From SW rev. 1.00

Insulation characteristics

Overvoltage category	III
Pollution degree	2

Electrical properties

Nominal voltage U_N	24 V AC

Connection data

Connection method	Screw connection (in connection with the base element)
Screw thread	M3
Tightening torque	0.5 Nm
Conductor cross-section flexible	0.2 mm² ... 2.5 mm²
Conductor cross-section rigid	0.2 mm² ... 4 mm²
Conductor cross-section AWG	24 ... 12

Dimensions

Dimensional drawing	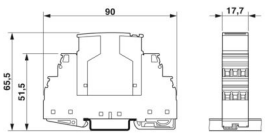
Width	17.5 mm
Height	44.8 mm
Depth	51.7 mm

Horizontal pitch	1 HP
Complete module width	17.7 mm
Complete module height	90 mm
Complete module depth	65.5 mm

Material specifications

Color	black (RAL 9005)
	copper color
Flammability rating according to UL 94	V-0
Housing material	PA 6.6

Mechanical properties

Mechanical data

Open side panel	No

Protective circuit

Direction of action	Line-Line & Line-Signal Ground/Shield & optional Signal Ground/Shield-Earth Ground
Nominal voltage U_N	24 V AC
Maximum continuous operating voltage U_C	40 V DC
	28 V AC
Rated current	300 mA (45 °C)
Operating effective current I_C at U_C	≤ 5 µA
Protective conductor current I_{PE}	≤ 1 µA (with PT 2X1+F-BE)
	≤ 10 µA (with PT 2x1-BE)
Nominal discharge current I_n (8/20) µs (line-ground)	10 kA
Pulse discharge current I_{imp} (10/350) µs	2.5 kA
Total discharge current I_{Total} (8/20) µs	20 kA
Max. discharge current I_{max} (8/20) µs maximum (line-earth)	10 kA
Nominal pulse current Ian (10/1000) µs (line-earth)	23 A
Output voltage limitation at 1 kV/µs (line-earth) spike	≤ 60 V (with PT 2x1-BE)
	≤ 600 V (with PT 2X1+F-BE)
Output voltage limitation at 1 kV/µs (line-earth) static	≤ 55 V (with PT 2x1-BE)
	≤ 50 V (with PT 2X1+F-BE)
Residual voltage at I_n (conductor-ground)	≤ 55 V
Residual voltage with Ian (10/1000) µs (line-earth)	≤ 65 V
Voltage protection level U_p (line-earth)	≤ 100 V (C2 - 10 kV/5 kA with PT 2X1-BE)
	≤ 600 V (C2 - 10 kV/5 kA with PT 2x1+F-BE)
Voltage protection level U_p static (line-earth)	≤ 30 V (C2 - 10 kV/5 kA with PT 2X1-BE)
	≤ 50 V (C2 - 10 kV/5 kA with PT 2x1+F-BE)
Response time t_A (line-earth)	≤ 1 ns (with PT 2x1-BE)
	≤ 100 ns (with PT 2X1+F-BE)
Response time t_A (line-signal ground)	≤ 1 ns (with PT 2X1+F-BE)
	typ. 0.5 dB (≤ 1.5 MHz / 50 Ω)

Input attenuation aE, asym.	typ. 0.2 dB (≤ 500 kHz / 150 Ω)
	typ. 0.1 dB (≤ 100 kHz / 600 Ω)
Cut-off frequency fg (3 dB), asym. (PE) in 50 Ω system	typ. 8 MHz
Cut-off frequency fg (3 dB), asym. (PE) in 150 Ω system	typ. 300 kHz
Cut-off frequency fg (3 dB), asym. (PE) in 600 Ω system	typ. 800 kHz
Capacity (Core-Earth)	typ. 0.6 nF (with PT 2x1-BE)
	typ. 2 nF (with PT 2X1+F-BE)
Resistance per path	4.7 Ω ±10 %
Surge protection fault message	none
Max. required back-up fuse	315 mA (T)
Impulse durability (line-earth)	C2 - 10 kV / 5 kA
	D1 - 2.5 kA

Environmental and real-life conditions

Ambient conditions

Degree of protection	IP20
Ambient temperature (operation)	-40 °C ... 85 °C
Ambient temperature (storage/transport)	-40 °C ... 85 °C
Altitude	≤ 2000 m (amsl)

Standards and regulations

Standards/specifications	IEC 61643-21
Note	2000 + corrigendum 2001 + A1:2008, modified + A2:2012
Standards/specifications	EN 61643-21
Note	2001 + A1:2009 + A2:2013

Mounting

Mounting type	on base element

Drawings

Dimensional drawing

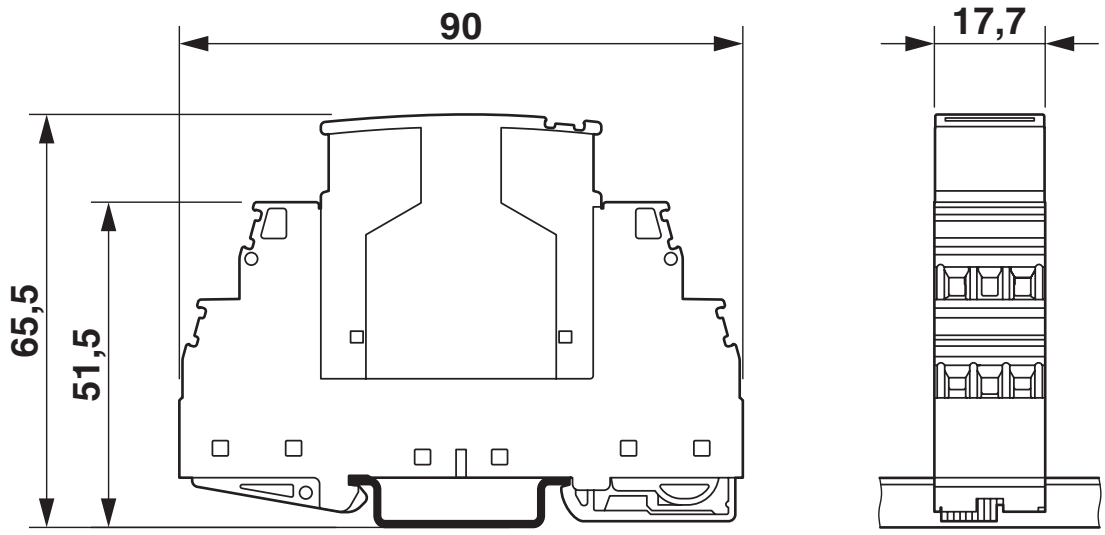

The figure shows the complete module consisting of a base element and connector

Diagram

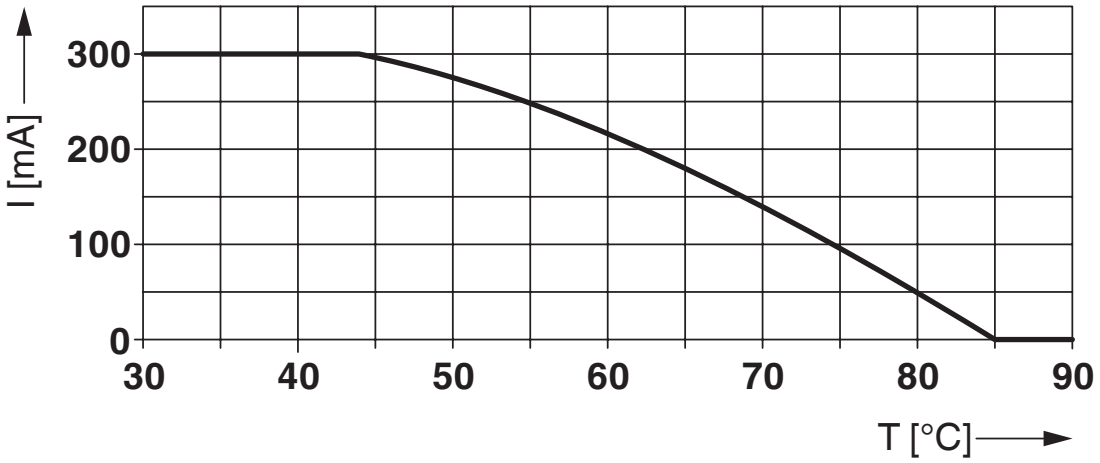

Circuit diagram

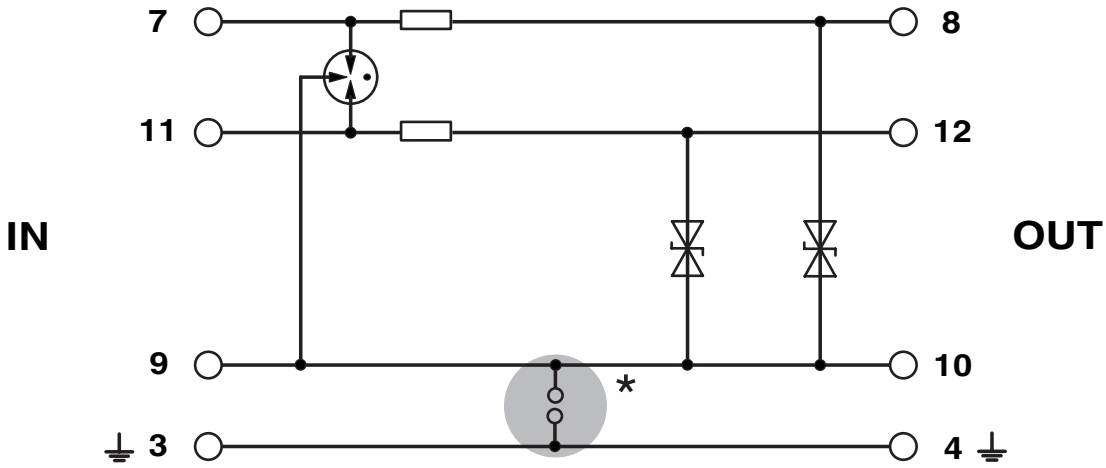

Classifications

ECLASS

ECLASS-13.0	27171501

UNSPSC

UNSPSC 21.0	39121600

Environmental product compliance

EU RoHS

Fulfills EU RoHS substance requirements	Yes
Exemption	7(a)

China RoHS

Environment friendly use period (EFUP)	EFUP-50
	An article-related China RoHS declaration table can be found in the download area for the respective article under "Manufacturer declaration". For all articles with EFUP-E, no China RoHS declaration table issued and required.

EU REACH SVHC

REACH candidate substance (CAS No.)	Lead(CAS: 7439-92-1)
SCIP	b43af039-b776-4c4d-9a64-ea6023a82385

Phoenix Contact 2026 © - all rights reserved
https://www.phoenixcontact.com

PHOENIX CONTACT Ltd
Halesfield 13, Telford
Shropshire, TF7 4PG
01952 681700
info@phoenixcontact.co.uk