PT 2+1-S-48DC-ST - Type 3 surge protection plug

2839648

https://www.phoenixcontact.com/gb/products/2839648

Please be informed that the data shown in this PDF document is generated from our online catalog. Please find the complete data in the user documentation. Our general terms of use for downloads are valid.



Protective plug PT with device surge protection for power supply units, visual error display. Nominal voltage: 48 V AC

Your advantages

- Easy testing and documentation with CHECKMASTER 2 with pluggable protective modules
- Maximum ease of maintenance, thanks to the 2-piece design
- Easy selection for all possible demands in MCR applications with a complete product portfolio
- The signal is not influenced during maintenance work, thanks to the impedance-neutral insertion and removal of protective plugs

ELEKTROGERÄTE RÜCKNAHME

Commercial data

Item number	2839648
Packing unit	10 pc
Minimum order quantity	10 pc
Sales key	CL1411
Product key	CL1411
GTIN	4017918193713
Weight per piece (including packing)	22.68 g
Weight per piece (excluding packing)	20.213 g
Customs tariff number	85363030
Country of origin	DE

Technical data

Product properties

Product type	Device protection
Product family	PLUGTRAB PT
IEC power supply system	DC
Type	Male
Number of positions	2
Surge protection fault message	optical

Insulation characteristics

Overvoltage category	III
Pollution degree	2
Arrester can be tested with CHECKMASTER from software version:	From SW rev. 1.00
IEC test classification	III
	T3
EN type	T3
Number of ports	One

Dimensions

Dimensional drawing	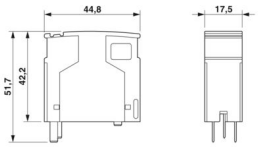
Width	17.5 mm
Height	44.8 mm
Depth	51.7 mm
Horizontal pitch	1 HP
Complete module width	17.7 mm
Complete module height	90 mm
Complete module depth	65.5 mm

Material specifications

Color	black (RAL 9005)
Flammability rating according to UL 94	V-0
CTI value of material	600
Insulating material	PA 6.6
Housing material	PA 6.6

Protective circuit

Mode of protection	L-N
	L-PE

	N-PE
	(L+) - (L-)
	(L+/L-) - PE
Direction of action	1L-N & N-PE
Nominal voltage U_N	48 V DC
Maximum continuous operating voltage U_C	60 V DC
Rated load current I_L	26 A (30 °C)
Protective conductor current I_{PE}	≤ 10 µA
Nominal discharge current I_n (8/20) µs	500 A
Combination wave U_{OC}	1 kV (2 Ω)
	1 kV (2 Ω)
Voltage protection level U_p	≤ 120 V
Response time t_A (L-N)	≤ 1 ns
Response time t_A (L-PE)	≤ 1 ns
Short-circuit current rating I_{SCCR}	200 A (without backup fuse for U_C)
Maximum backup fuse for through wiring	25 A (gG)
Max. backup fuse with branch wiring	50 A (gG)

Environmental and real-life conditions

Ambient conditions

Degree of protection	IP20
Ambient temperature (operation)	-40 °C ... 80 °C
Ambient temperature (storage/transport)	-40 °C ... 80 °C
Altitude	≤ 2000 m (amsl)
Permissible humidity (operation)	5 % ... 95 %

Standards and regulations

Standards/specifications	EN 61643-11
Note	2012
Standards/specifications	IEC 61643-11
Note	2011

Mounting

Mounting type	on base element

Drawings

Dimensional drawing

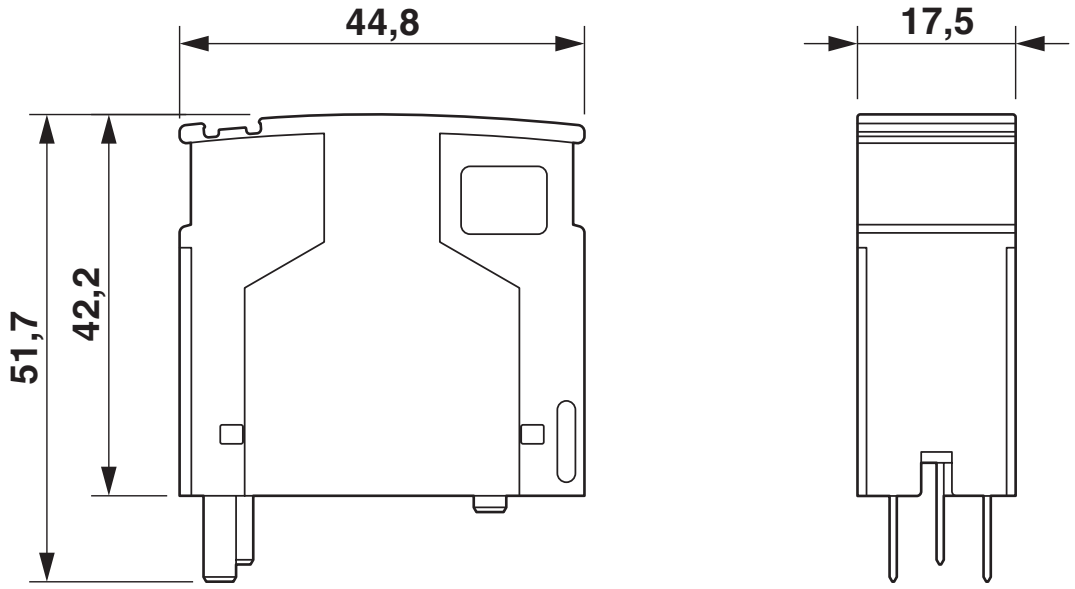

Circuit diagram

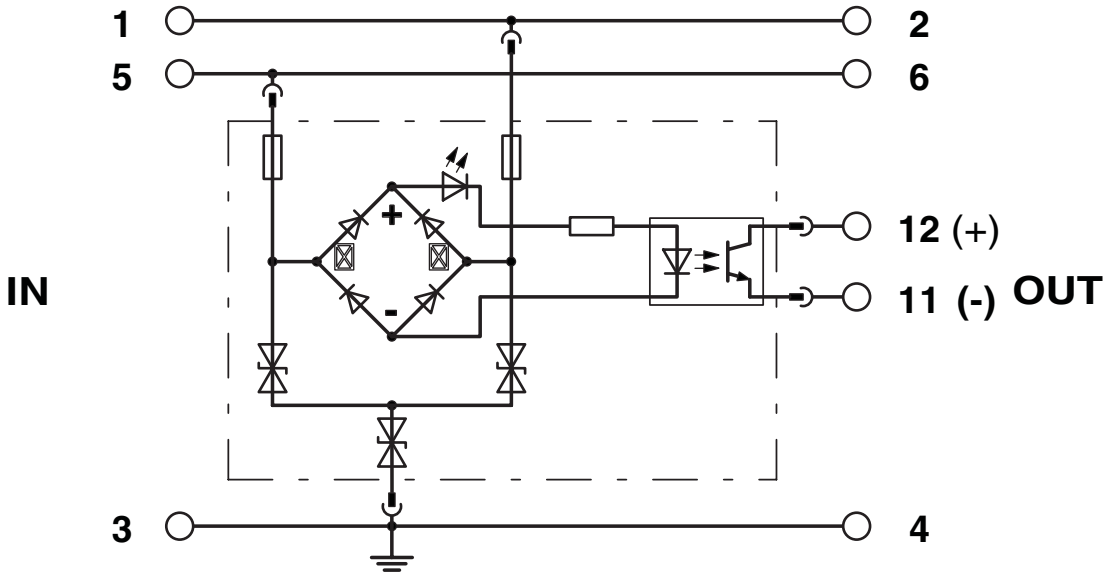

Classifications

ECLASS

ECLASS-13.0	27171203
ECLASS-15.0	27171203

ETIM

ETIM 10.0	EC000942

UNSPSC

UNSPSC 21.0	39121600

Environmental product compliance

EU RoHS

Fulfills EU RoHS substance requirements	Yes
Exemption	7(a), 7(c)-I

China RoHS

Environment friendly use period (EFUP)	EFUP-50
	An article-related China RoHS declaration table can be found in the download area for the respective article under "Manufacturer declaration". For all articles with EFUP-E, no China RoHS declaration table issued and required.

EU REACH SVHC

REACH candidate substance (CAS No.)	Hexahydromethylphthalic anhydride(CAS: n/a)
	Lead(CAS: 7439-92-1)
SCIP	f0f4c759-074a-471f-853a-6aced60c743b

EF3.1 Climate Change

CO2e kg	1.53 kg CO2e

Phoenix Contact 2026 © - all rights reserved
https://www.phoenixcontact.com

PHOENIX CONTACT Ltd
Halesfield 13, Telford
Shropshire, TF7 4PG
01952 681700
info@phoenixcontact.co.uk