PT 4-24DC-ST - Surge protection plug

2839240

https://www.phoenixcontact.com/gb/products/2839240

Please be informed that the data shown in this PDF document is generated from our online catalog. Please find the complete data in the user documentation. Our general terms of use for downloads are valid.





Protective plug PT with protective circuit for a 4-core floating signal circuit. Nominal voltage: 24 V DC

Your advantages

- Easy testing and documentation with CHECKMASTER 2 with pluggable protective modules
- Maximum ease of maintenance, thanks to the 2-piece design
- Easy selection for all possible demands in MCR applications with a complete product portfolio
- The signal is not influenced during maintenance work, thanks to the impedance-neutral insertion and removal of protective plugs

Commercial data

Item number	2839240
Packing unit	10 pc
Minimum order quantity	10 pc
Sales key	CL2111
Product key	CL2111
GTIN	4017918182786
Weight per piece (including packing)	26.75 g
Weight per piece (excluding packing)	21.78 g
Customs tariff number	85363010
Country of origin	DE

Technical data

Product properties

Product type	Surge protection for MCR technology
Product family	PLUGTRAB PT
IEC test classification	C1
	C2
	C3
	D1
VDE requirement class	C1
	C2
	C3
	D1
Type	Male
Surge protection fault message	none
Arrester can be tested with CHECKMASTER from software version:	From SW rev. 1.00

Insulation characteristics

Overvoltage category	III
Pollution degree	2

Electrical properties

Nominal voltage U_N	24 V DC

Connection data

Connection method	Screw connection (in connection with the base element)
Screw thread	M3
Tightening torque	0.8 Nm
Conductor cross-section flexible	0.2 mm² ... 2.5 mm²
Conductor cross-section rigid	0.2 mm² ... 4 mm²
Conductor cross-section AWG	24 ... 12

Dimensions

Dimensional drawing	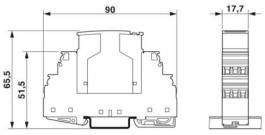
Width	17.7 mm
Height	45 mm
Depth	52 mm
Horizontal pitch	1 HP
Complete module width	17.7 mm

Complete module height	90 mm
Complete module depth	65.5 mm

Material specifications

Color	black (RAL 9005)
	copper color
Flammability rating according to UL 94	V-0
Housing material	PA 6.6

Mechanical properties

Mechanical data

Open side panel	No

Protective circuit

Direction of action	Line-Line & Line-Signal Ground/Shield & optional Signal Ground/Shield-Earth Ground
Nominal voltage U_N	24 V DC
Maximum continuous operating voltage U_C	27 V DC
	19 V AC
Rated current	2 A (80 °C)
Operating effective current I_C at U_C	≤ 5 µA
Protective conductor current I_{PE}	≤ 4 µA (with PT 4-BE)
	≤ 1 µA (with PT 4+F-BE)
Nominal discharge current I_n (8/20) µs (line-line)	365 A
Nominal discharge current I_n (8/20) µs (line-ground)	10 kA
Pulse discharge current I_{imp} (10/350) µs	2.5 kA (per path)
Total discharge current I_{Total} (8/20) µs	20 kA
Max. discharge current I_{max} (8/20) µs maximum (line-line)	365 A
Max. discharge current I_{max} (8/20) µs maximum (line-earth)	10 kA
Nominal pulse current Ian (10/1000) µs (line-line)	67 A
Output voltage limitation at 1 kV/µs (line-line) spike	≤ 40 V
Output voltage limitation at 1 kV/µs (line-earth) spike	≤ 450 V (with PT 4-BE)
	≤ 1 kV (with PT 4+F-BE)
Output voltage limitation at 1 kV/µs (line-line) static	≤ 40 V
Residual voltage at I_n (conductor-conductor)	≤ 60 V
Residual voltage with Ian (10/1000) µs (line-line)	≤ 45 V
Voltage protection level U_p (line-line)	≤ 50 V (C1 - 500 V / 250 A)
	≤ 45 V (C3 - 67 A)
Voltage protection level U_p (line-earth)	≤ 500 V (C2 - 10 kV / 5 kA with PT 4-BE)
	≤ 1 kV (C2 - 10 kV / 5 kA with PT 4+F-BE)
	≤ 500 V (6 kV / 3 kA)
Response time t_A (line-line)	≤ 1 ns
Response time t_A (line-earth)	≤ 100 ns
Response time t_A (line-signal ground)	≤ 1 ns

Input attenuation aE, sym.	0.1 dB (≤ 1 MHz)
	0.1 dB (≤ 1 MHz / 50 Ω)
	0.2 dB (≤ 400 kHz / 150 Ω)
Cut-off frequency fg (3 dB), sym. in 50 Ω system	typ. 4.5 MHz
Cut-off frequency fg (3 dB), sym. in 150 Ω system	typ. 1.5 MHz
Resistance per path	0 Ω
Surge protection fault message	none
Impulse durability (line-line)	C1 - 500 V / 250 A
	C3 - 25 A
Impulse durability (line-earth)	C2 - 10 kV / 5 kA
	D1 - 2.5 kA

Environmental and real-life conditions

Ambient conditions

Degree of protection	IP20
Ambient temperature (operation)	-40 °C ... 85 °C

Standards and regulations

VDE requirement class	C1
	C2
	C3
	D1

Standards Information technology specification

Standards/regulations	IEC 61643-21
	DIN EN 61643-21
	UL 497B
	IEC 61643-21
	DIN EN 61643-21
	UL 497B

Air clearances and creepage distances

Standards/regulations	VDE 0110-1 / IEC 60664-1
Standards/specifications	EN 61643-21/A1
Note	2009
Standards/specifications	IEC 61643-21/A1
Note	2008
Standards/specifications	UL 497B

Mounting

Mounting type	on base element

Drawings

Dimensional drawing

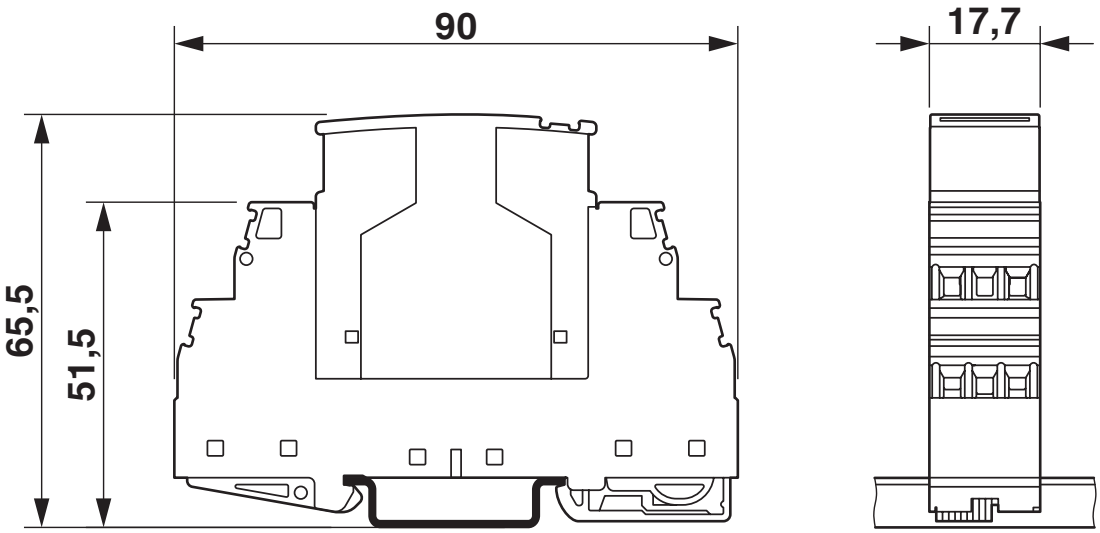

The figure shows the complete module consisting of a base element and connector

Application drawing

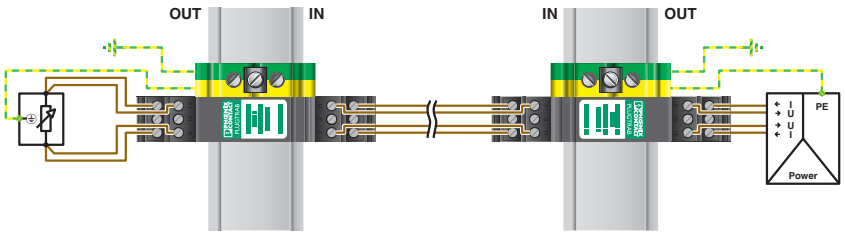

Circuit diagram

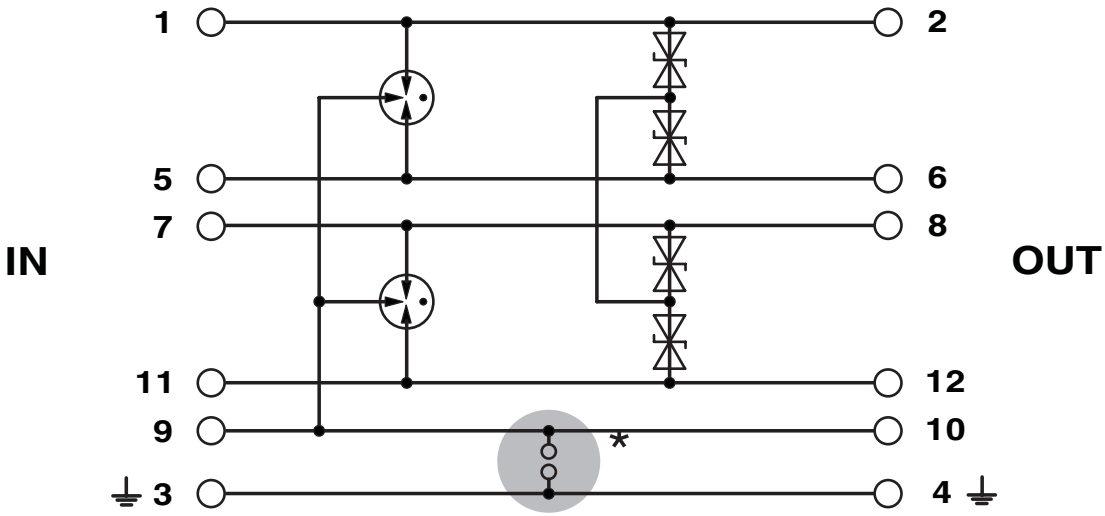

Approvals

To download certificates, visit the product detail page: https://www.phoenixcontact.com/gb/products/2839240

DNV GL
Approval ID: TAE00001N6

UL Listed
Approval ID: FILE E 138168

	Nominal voltage U_N	Nominal current I_N	Cross section AWG	Cross section mm^2
keine				
	24 V	2 A	-	-

cUL Listed
Approval ID: FILE E 333250

UL Listed
Approval ID: FILE E 333250

Classifications

ECLASS

ECLASS-13.0	27171501
ECLASS-15.0	27171501

ETIM

ETIM 10.0	EC001466

UNSPSC

UNSPSC 21.0	39121600

Environmental product compliance

EU RoHS

Fulfills EU RoHS substance requirements	Yes
Exemption	7(a), 7(c)-I

China RoHS

Environment friendly use period (EFUP)	EFUP-50
	An article-related China RoHS declaration table can be found in the download area for the respective article under "Manufacturer declaration". For all articles with EFUP-E, no China RoHS declaration table issued and required.

EU REACH SVHC

REACH candidate substance (CAS No.)	Lead(CAS: 7439-92-1)
SCIP	941e6df2-f5dd-4933-9209-e903b00180a5

EF3.1 Climate Change

CO2e kg	0.746 kg CO2e

Phoenix Contact 2026 © - all rights reserved
https://www.phoenixcontact.com

PHOENIX CONTACT Ltd
Halesfield 13, Telford
Shropshire, TF7 4PG
01952 681700
info@phoenixcontact.co.uk